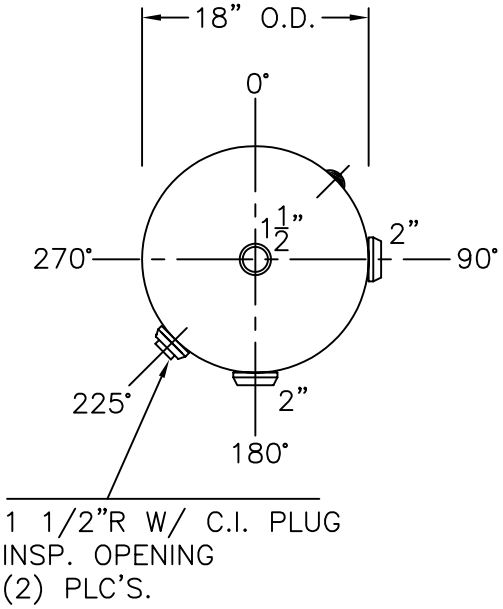

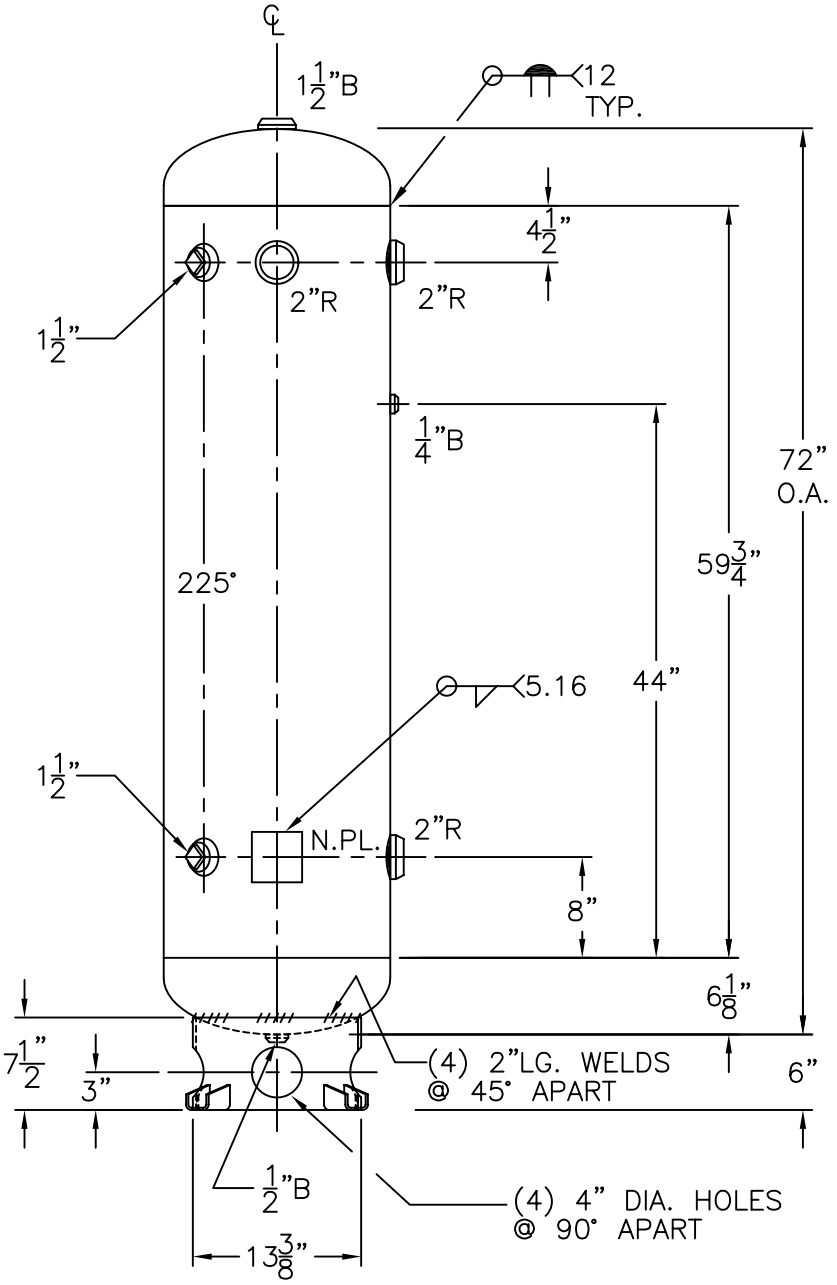

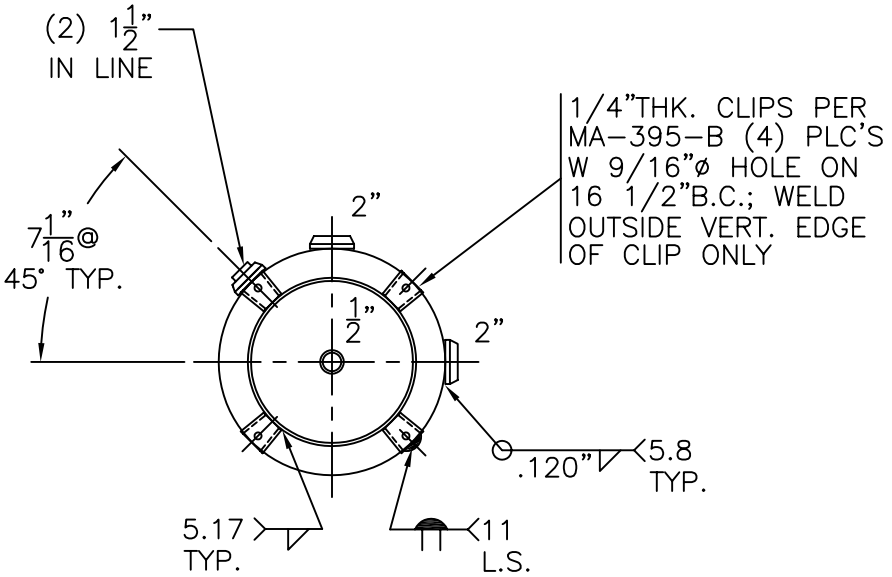

NOTE: 1) HYDRO @ 260 PSIG. MIN.

SHELL / HEADS	
	.135" SA-414-G 2:1 S.E.
	JOGGLE
	.149" SA-414-G
M.A.W.P.	200 PSIG. @ 400 °F
M.D.M.T.	-20 °F @ 200 PSIG.
ASME. SECTION VIII DIV. 1, 2007 ADD 2009	
X-RAY:	RT-NO
GALLONS: 73	WT. 217 LBS.
SERIAL NO.	
N.B.	

18-VA-73-R	REV. 3-10-10
FOR: HANSON STANDARD	DATE: 11-18-86
VERT. AIR TANK	
INSIDE: UNPAINTED	
OUTSIDE: PRIME	
BY: J.G.	SCALE: 3/4"=12"

ROY E. HANSON JR. MFG.
1600 E. WASHINGTON BLVD.
LOS ANGELES, CA 90021