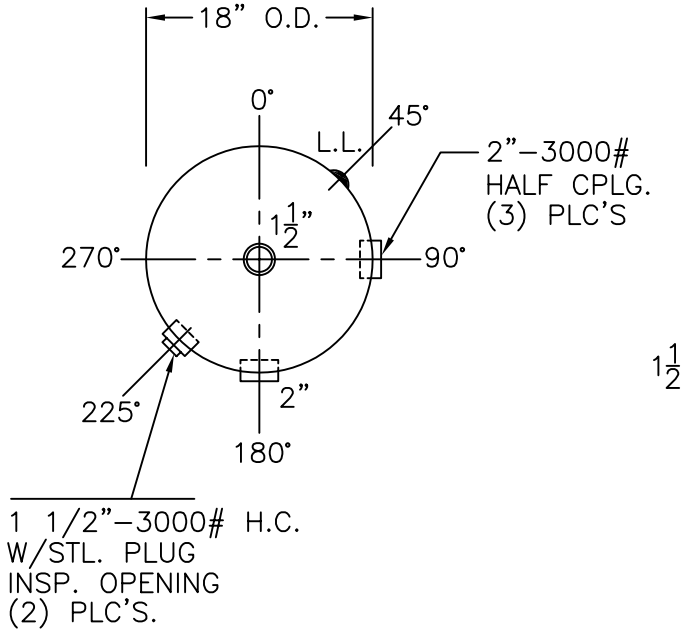

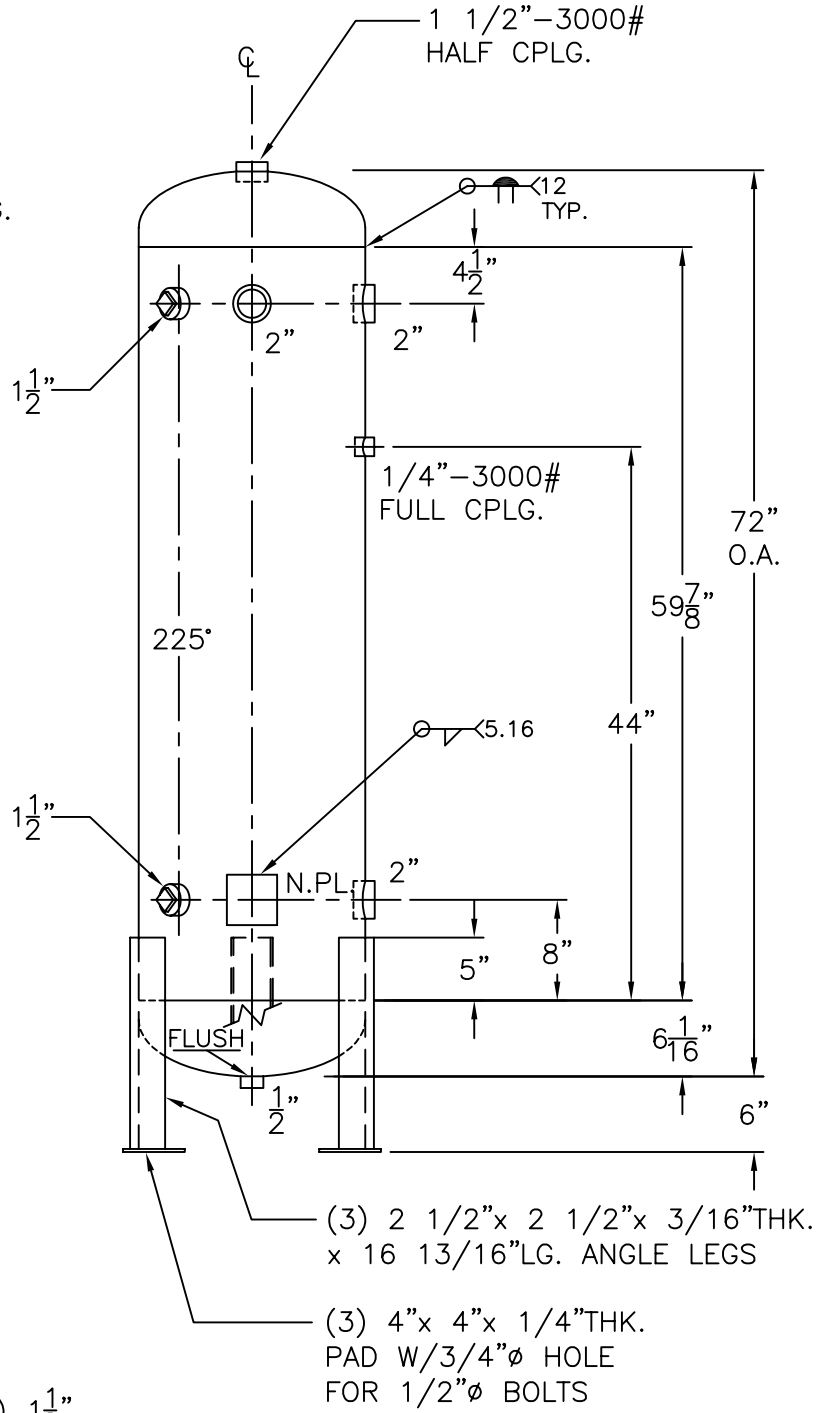

NOTE: 1) HYDRO @ 520 PSIG. MIN.

SHELL / HEADS			
			.200" SA-455 2:1 S.E.
			(.195" MIN.) JOGGLE
		.245" SA-455	
M.A.W.P.	400 PSIG. @	400 °F	
M.D.M.T.	-20 °F @	400 PSIG.	
ASME. SECTION VIII	DIV. 1, 2010 ADD 2010		
X-RAY:	RT-NO		
GALLONS: 73	WT. 314 LBS.		
SERIAL NO.			
N.B.			

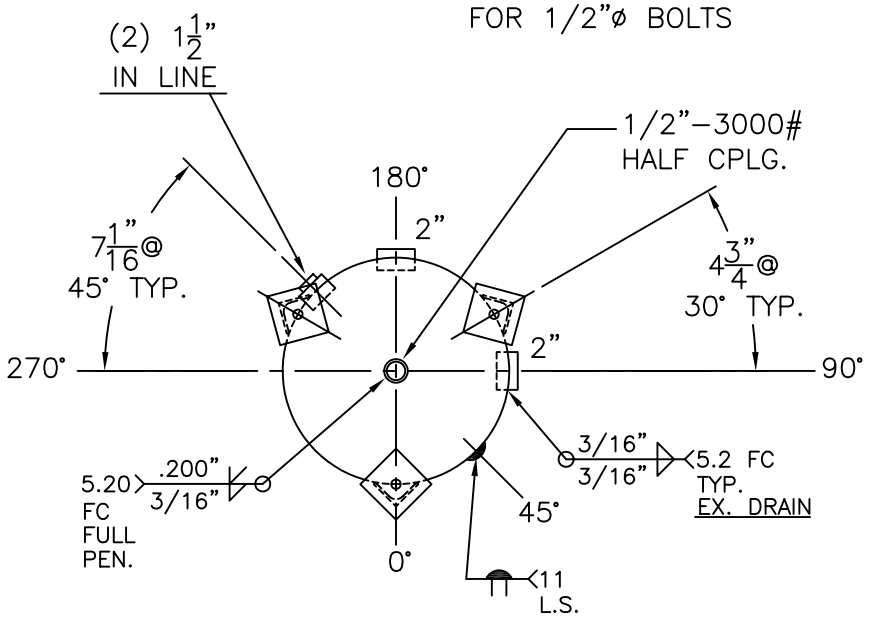

18-VJ-73-L	REV. 5-3-11
FOR: HANSON STANDARD	DATE: 12-23-84
VERT. AIR TANK	
SURFACE AREA = 29.6 SQ. FT.	
INSIDE: UNPAINTED	
OUTSIDE: PRIME	
LEG-ZONE 4-15 KM.	
BY: J.G.	SCALE: 3/4"=12"

ROY E. HANSON JR. MFG.
1600 E. WASHINGTON BLVD.
LOS ANGELES, CA 90021