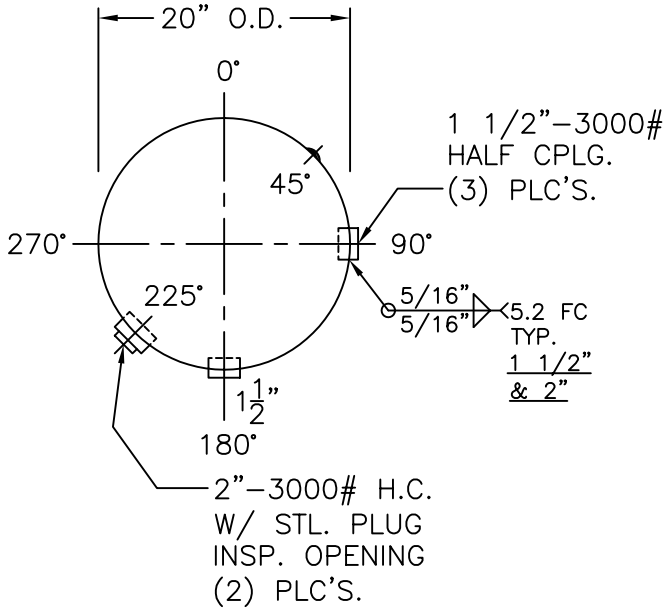

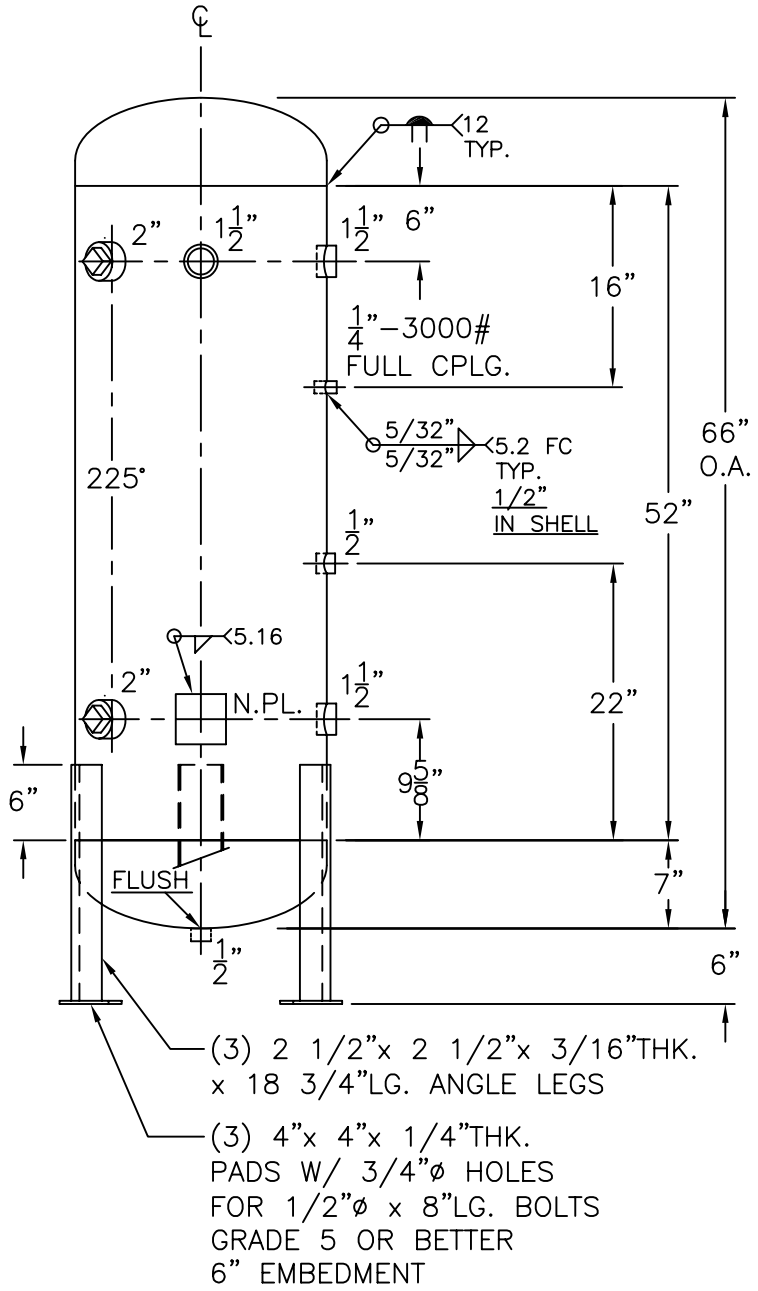

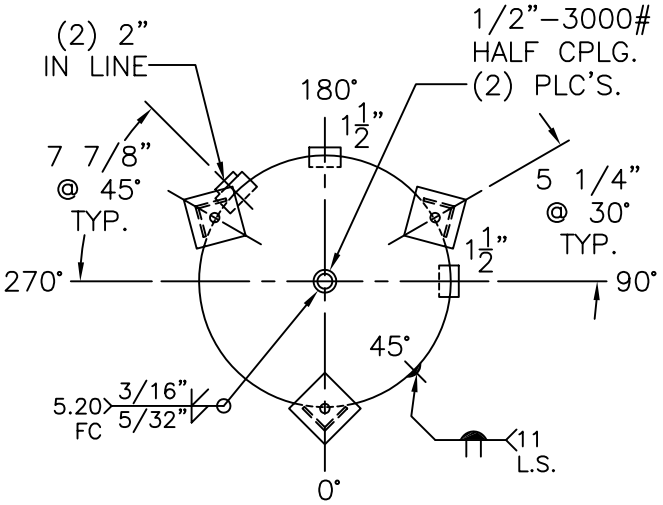

NOTE: 1) HYDRO @ 715 PSIG. MIN.

SHELL / HEADS			
			.375" SA–455 2:1 S.E.
			BEVEL
		.375" SA–455	
M.A.W.P. 550 PSIG. @ 400 °F			
M.D.M.T. –20 °F @ 550 PSIG.			
ASME. SECTION VIII DIV. 1, 2010 ADD 2010			
X–RAY: RT–NO			
GALLONS: 80	WT. 507 LBS.		
SERIAL NO.			
N.B.			

20–VK–80–L	REV. 6–13–11
FOR: HANSON STANDARD	DATE: 9–18–92
VERT. AIR TANK	
SURFACE AREA = 30.5 SQ. FT.	
INSIDE: UNPAINTED	
OUTSIDE: PRIME	
LEG–ZONE 4–15 KM.	
BY: E.S.	SCALE: 3/4"=12"

ROY E. HANSON JR. MFG.
1600 E. WASHINGTON BLVD.
LOS ANGELES, CA 90021