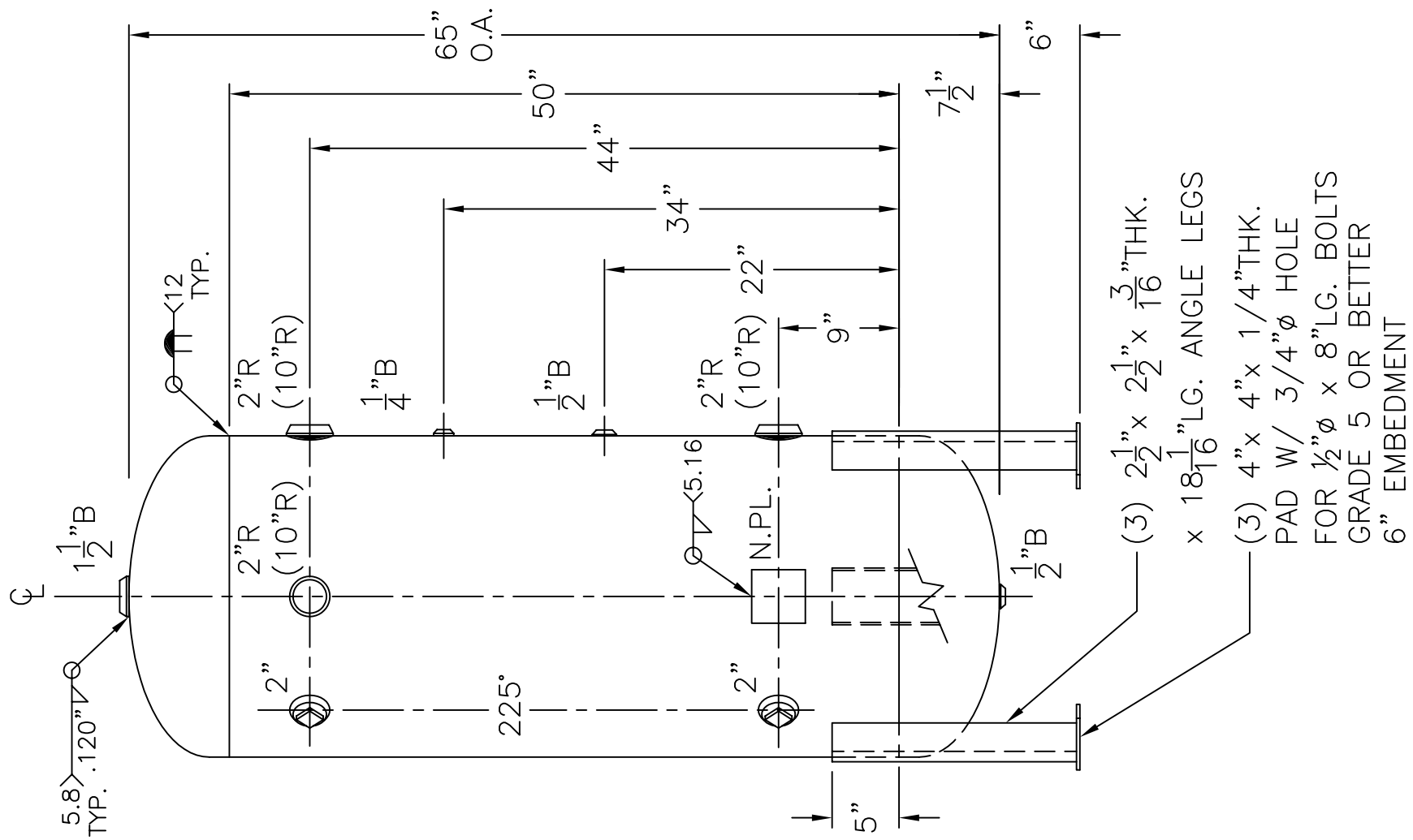

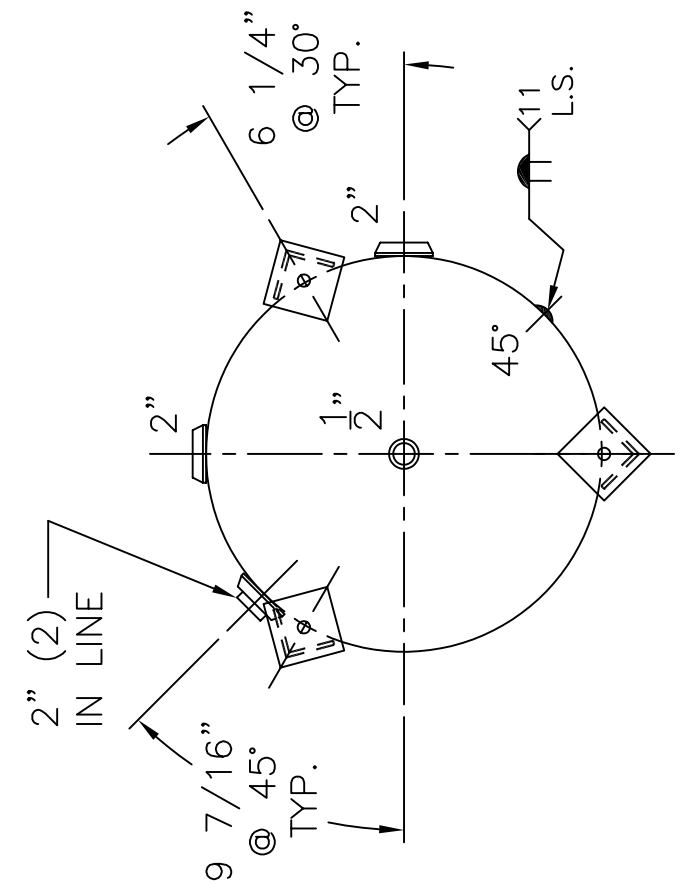

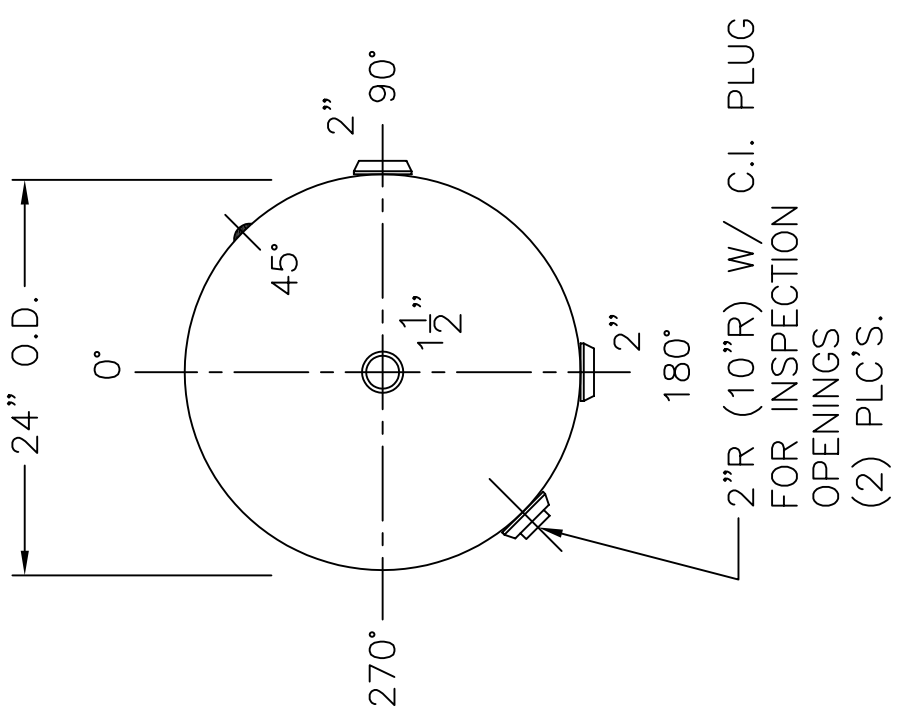

NOTE: 1) HYDRO @ 260 PSIG. MIN.

SHELL / HEADS	.164" SA-414-G 2:1 S.E.	24-VA-120-L	REV. 1-11-11
	JOGGLE		DATE: 5-12-83
		FOR: HANSON STANDARD	
		VERT. AIR TANK	
	.136" SA-414-G	SURFACE AREA = 36.4 SQ. FT.	
		INSIDE: UNPAINTED	
M.A.W.P. 200 PSIG. @ 400 °F		OUTSIDE: PRIME	
M.D.M.T. -20 °F @ 200 PSIG.		CAD-"B" SIZE UNDER "STD"-SERIES	
ASME. SECTION VIII DIV. 1, 2010 ADD 2010		LEG-ZONE 4-15 KM.	
X-RAY: RT-4 SPOT L.S. ONLY		BY: E.S.	SCALE: 1"=12"
GALLONS: 120	WT. 267 LBS.	ROY E. HANSON JR. MFG.	
SERIAL NO.		1600 E. WASHINGTON BLVD. LOS ANGELES, CA 90021	
N.B.			