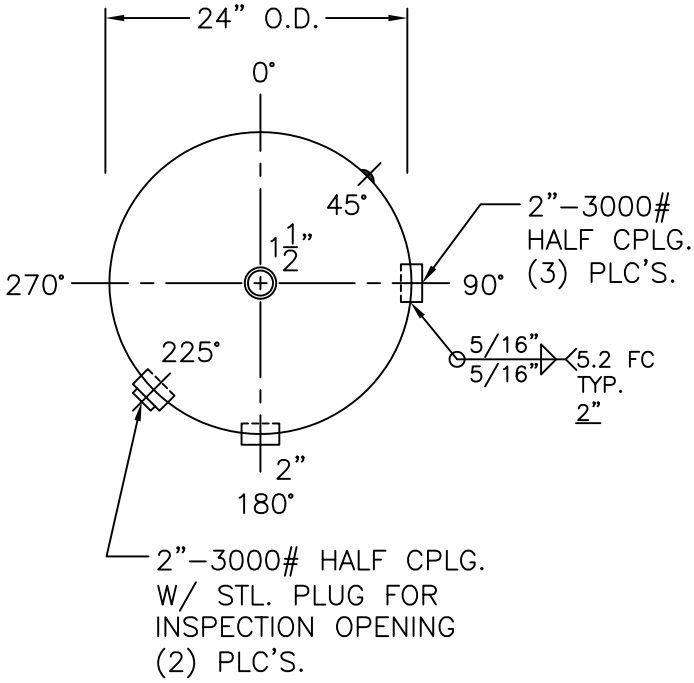

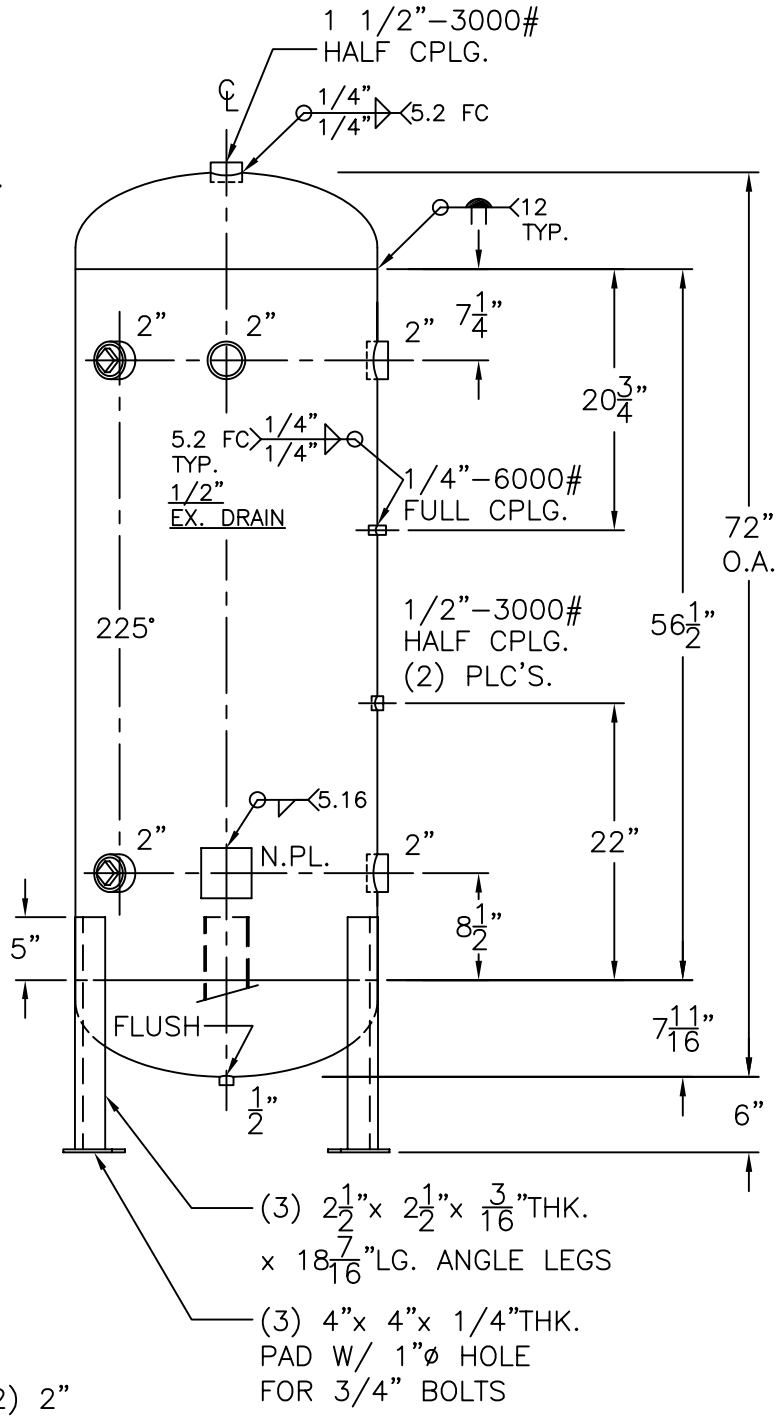

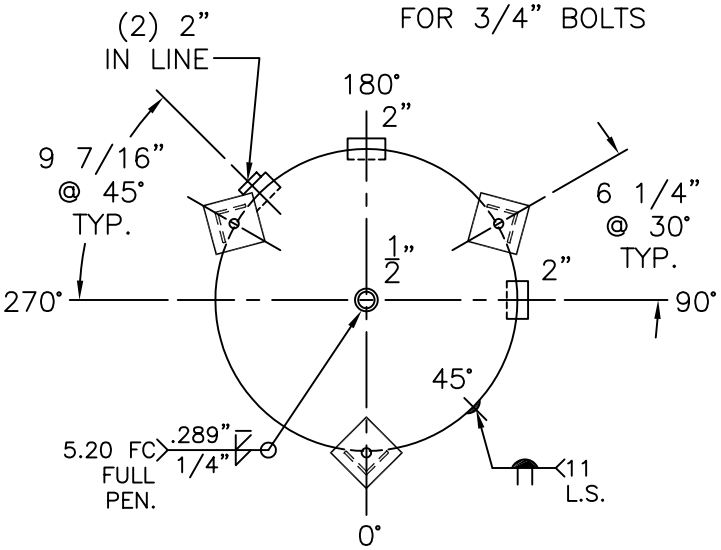

NOTE: 1) HYDRO @ 520 PSIG. MIN.

	.289" SA-455 2:1 S.E.
	TRIM
SHELL / HEADS	
	.338" SA-455
M.A.W.P. 400 PSIG. @ 400 °F	
M.D.M.T. -20 °F @ 400 PSIG.	
ASME. SECTION VIII DIV. 1, 2010 ADD 2010	
X-RAY: RT-NO	
GALLONS: 130	WT. 595 LBS.
SERIAL NO.	
N.B.	

24-VJ-130-L	REV. 5-3-11
FOR: HANSON STANDARD	DATE: 3-6-85
VERT. AIR TANK	
SURFACE AREA = 40.1 SQ. FT.	
INSIDE: UNPAINTED	
OUTSIDE: PRIME	
LEG-ZONE 4-10 KM.	
BY: E.S.	SCALE: 3/4"=12"

ROY E. HANSON JR. MFG.
1600 E. WASHINGTON BLVD.
LOS ANGELES, CA 90021