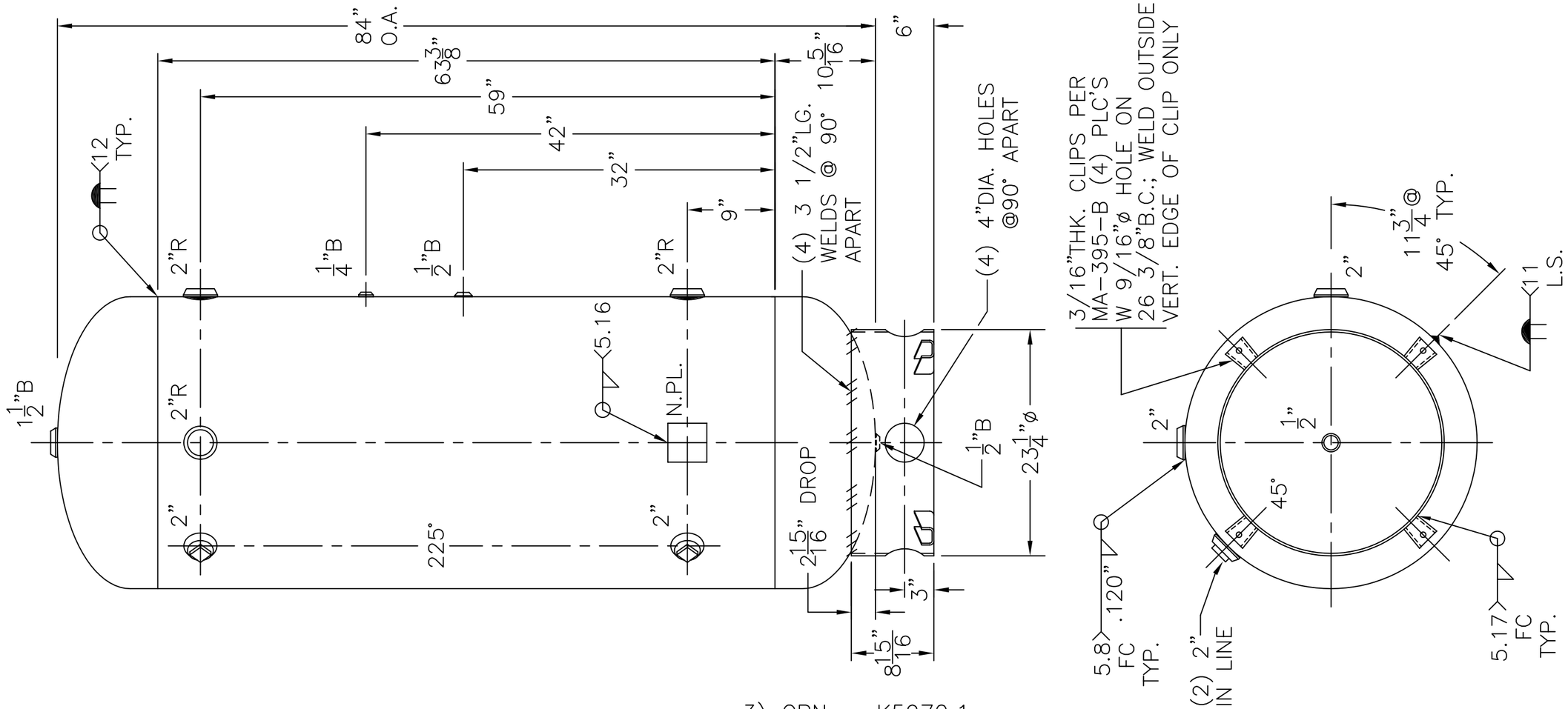

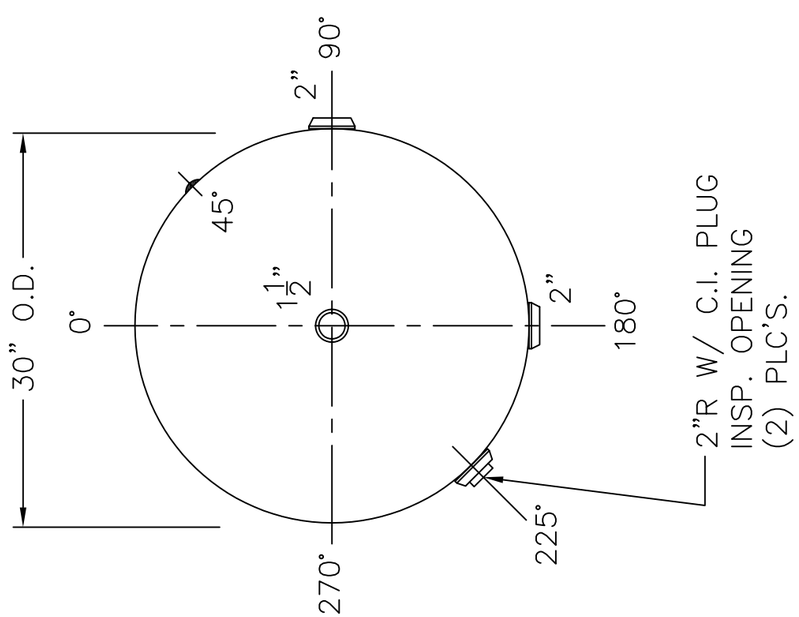

NOTE: 1) HYDRO @ 392 PSIG. MIN.
2) IMPACT TESTED? NO UG 20 (f)
3) CRN – K5970.1

SHELL / HEADS	.211" SA-455 2:1 S.E.	
	JOGGLE – .249 OFFSET	
	.250" SA-455	
M.A.W.P.	300 PSIG. @ 400 °F	
M.D.M.T.	–20 °F @ 300 PSIG.	
ASME. SECTION VIII	DIV. 1, 2007 ADD 2007	
X-RAY:	RT-4 SPOT L.S. & HD. G.S.	
GALLONS:	240	WT. 637 LBS.
SERIAL NO.		
N.B.		

30-VD-240-R	REV. 6-17-08
	DATE: 12-2-86
FOR: HANSON STANDARD	
VERT. AIR TANK	
SURFACE AREA = 58.7 SQ. FT.	
INSIDE: UNPAINTED	
OUTSIDE: PRIME	
BY: J.G.	SCALE: 3/4"=12"

ROY E. HANSON JR. MFG.
1600 E. WASHINGTON BLVD.
LOS ANGELES, CA 90021