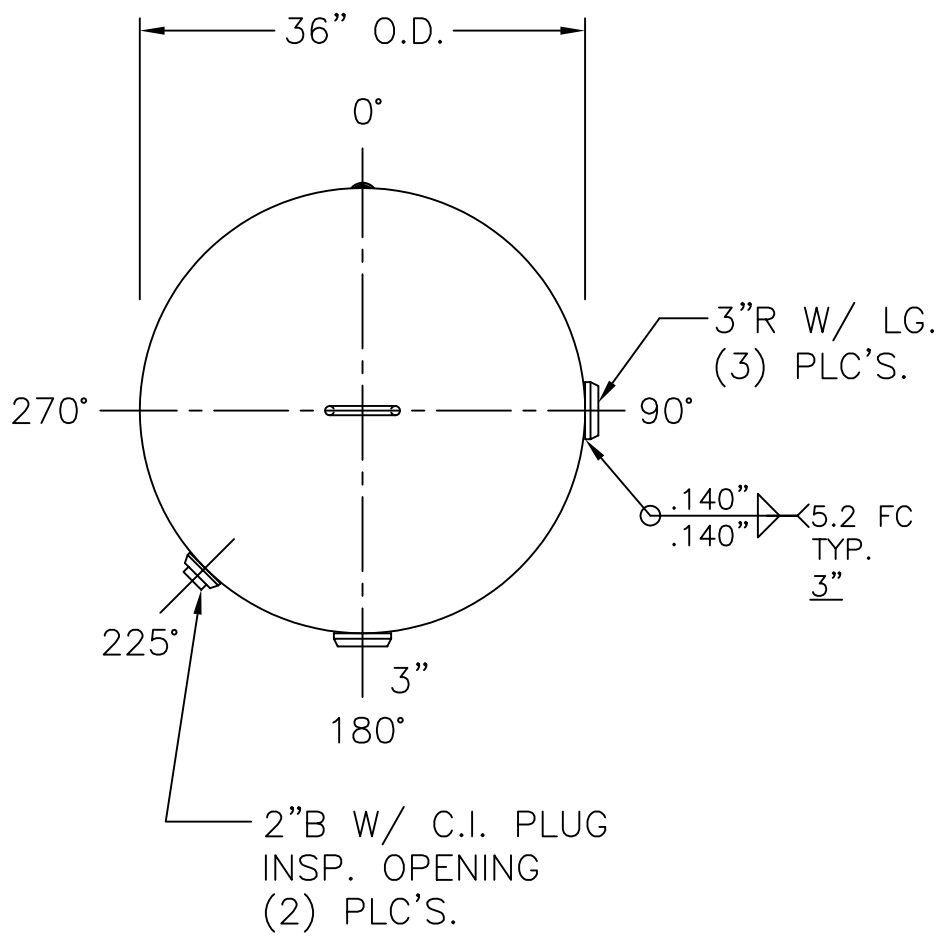

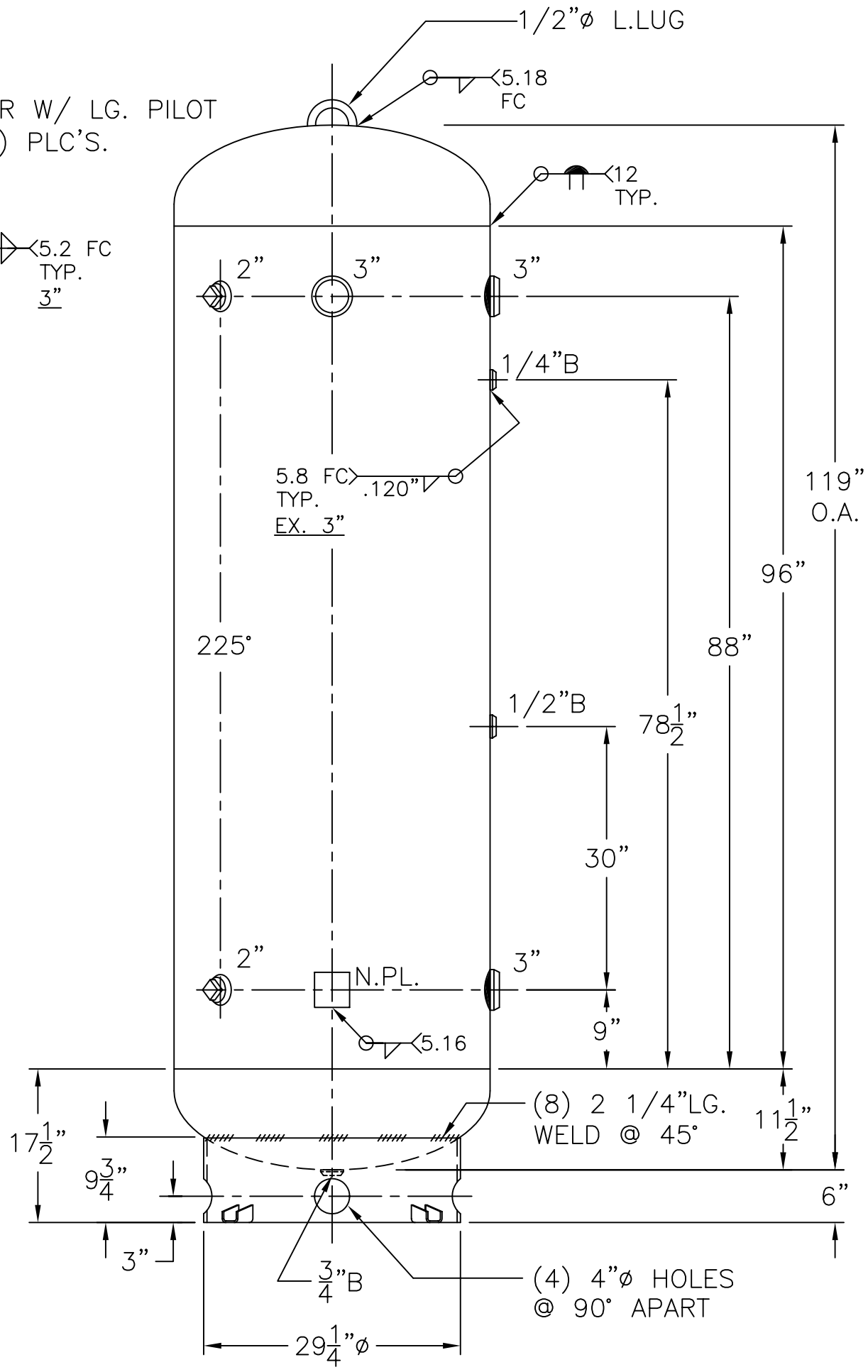

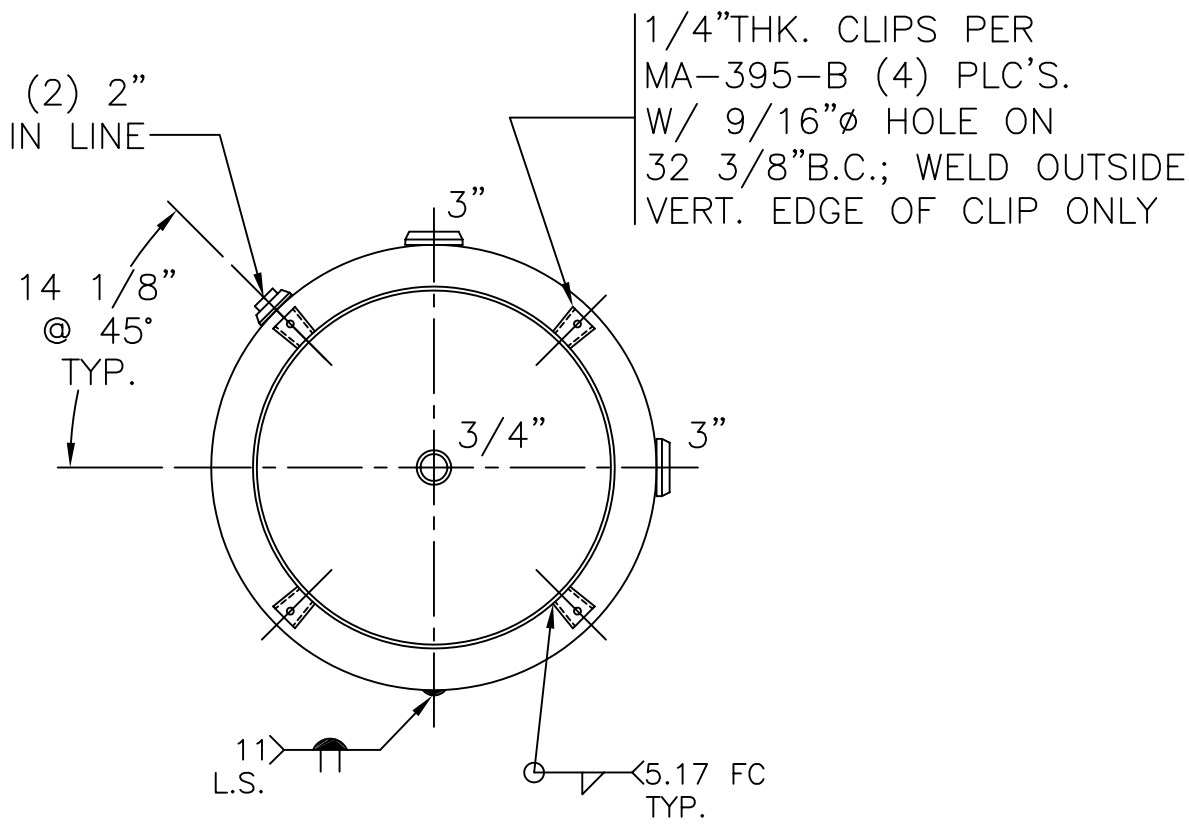

NOTE: 1) HYDRO @ 390 PSIG. MIN.

SHELL / HEADS	
.3125" SA-455 2:1 S.E.	
(.293" MIN.) TRIM	
.317" SA-455	
(.295" MIN.)	
M.A.W.P. 300 PSIG. @ 400 °F	
M.D.M.T. -20 °F @ 300 PSIG.	
ASME. SECTION VIII DIV. 1, 2007 ADD. 2008	
X-RAY: RT-4 SPOT L.S. ONLY	
GALLONS: 500	WT. 1367 LBS.
SERIAL NO.	
N.B.	

36-VD-500-R	REV. 11-17-09
	DATE: 1-2-87
FOR: HANSON STANDARD	
VERT. AIR TANK	
INSIDE: UNPAINTED	
OUTSIDE: PRIME	
CAD-"B" UNDER "STD"-SERIES	
BY: E.S.	SCALE:3/4"=12"

ROY E. HANSON JR. MFG.
1600 E. WASHINGTON BLVD.
LOS ANGELES, CA 90021