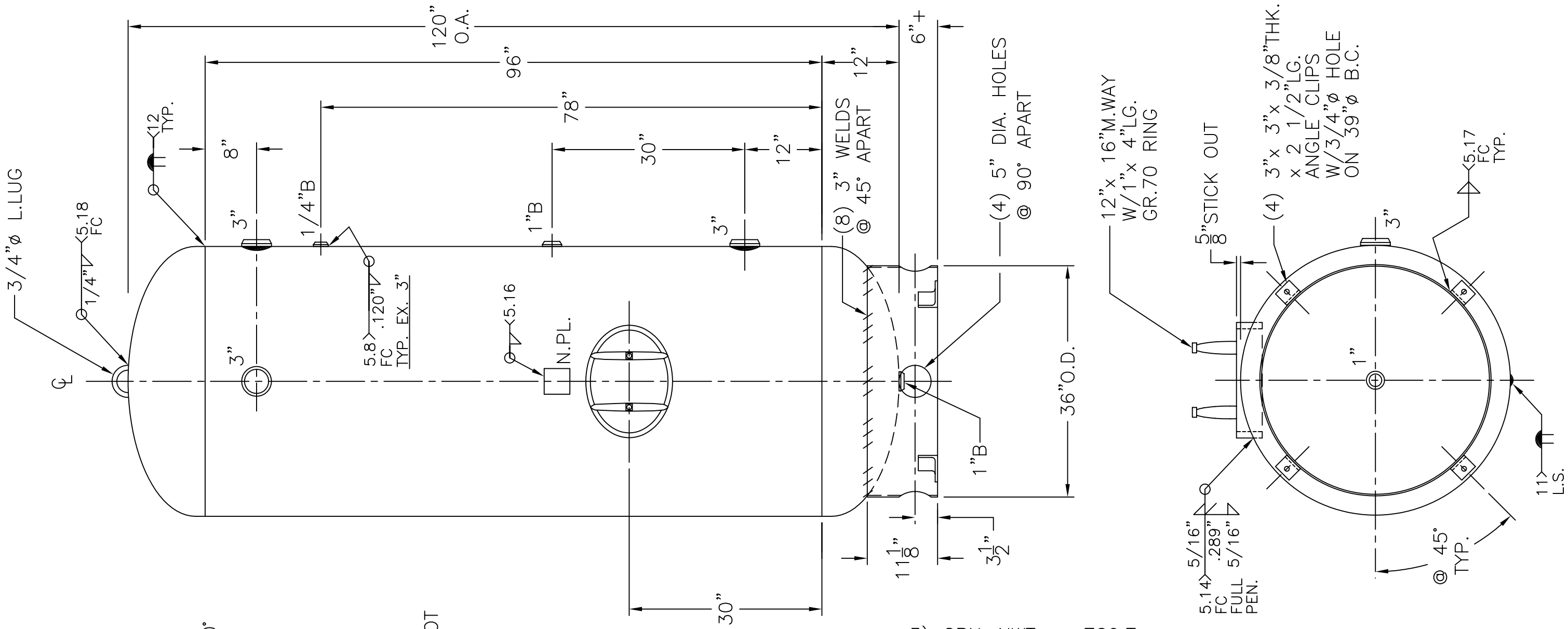

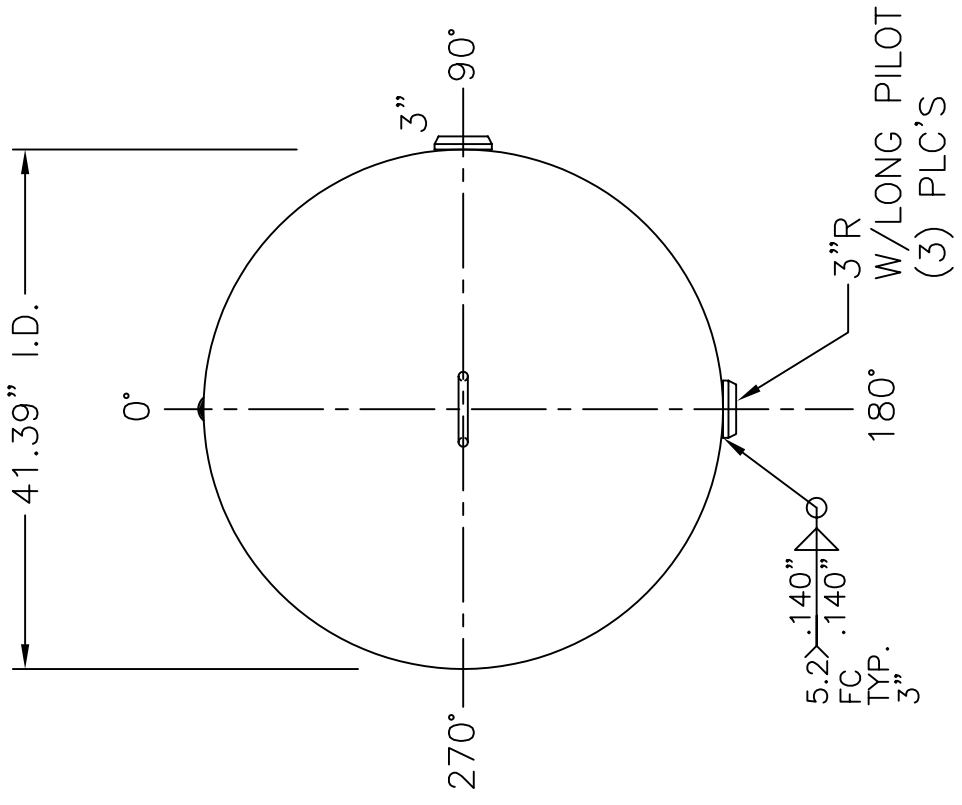

NOTE: 1) HYDRO @ 325 PSIG. MIN.
2) IMPACT TEST? NO UG-20(f).
3) CRN-NWT. - 709.T

SHELL / HEADS	.289" SA-455 2:1 S.E.	42-VC-660-R — REV. 8-26-09
	JOGGLE (.285"MIN.)	DATE: 12-3-79
		FOR: HANSON STANDARD
		VERT. AIR TANK
	.289" SA-455	
		INSIDE: UNPAINTED
M.A.W.P. 250 PSIG. @ 400 °F		
M.D.M.T. -20 °F @ 250 PSIG.		OUTSIDE: PRIME
ASME. SECTION VIII DIV. 1, 2007 ADD 2008		CAD "B" SIZE UNDER "STD"-SERIES
X-RAY: RT-4 SPOT L.S. ONLY		BY: J.G. — SCALE:3/4"=12"
GALLONS: 660	WT. 1588 LBS.	ROY E. HANSON JR. MFG.
SERIAL NO.		1600 E. WASHINGTON BLVD.
N.B.		LOS ANGELES, CA 90021