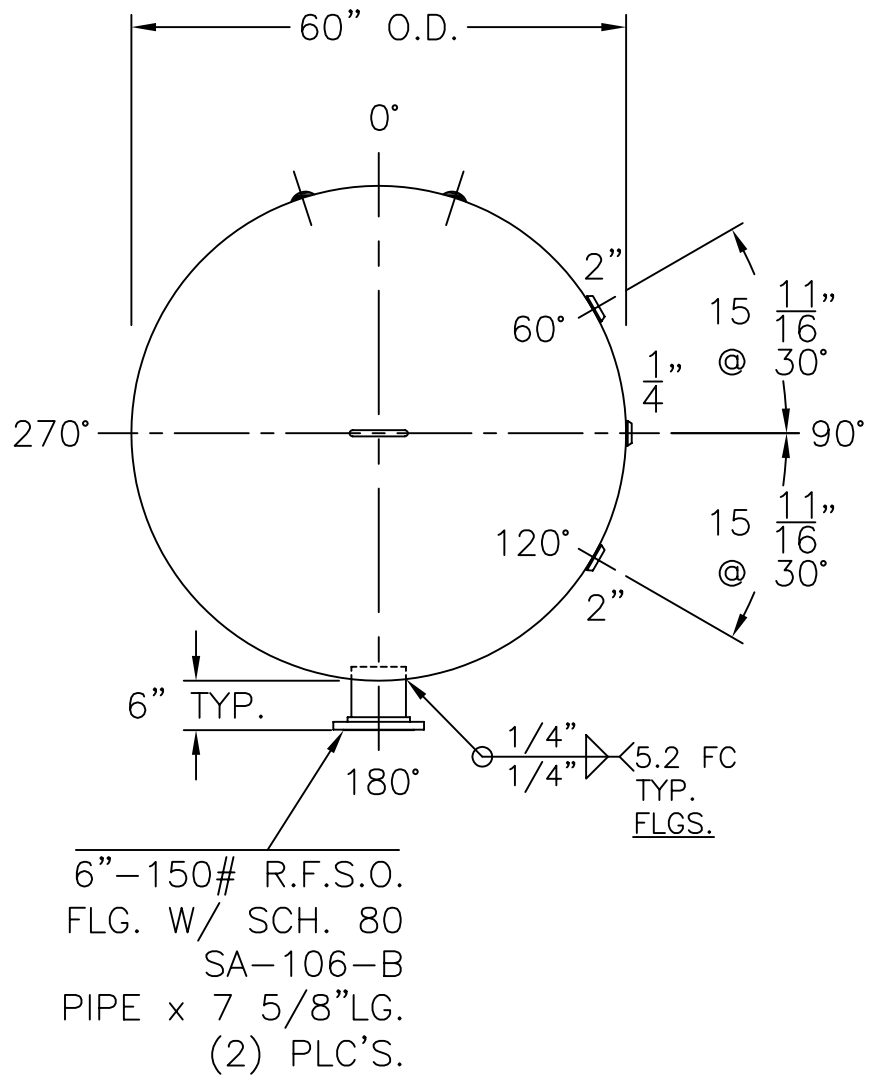

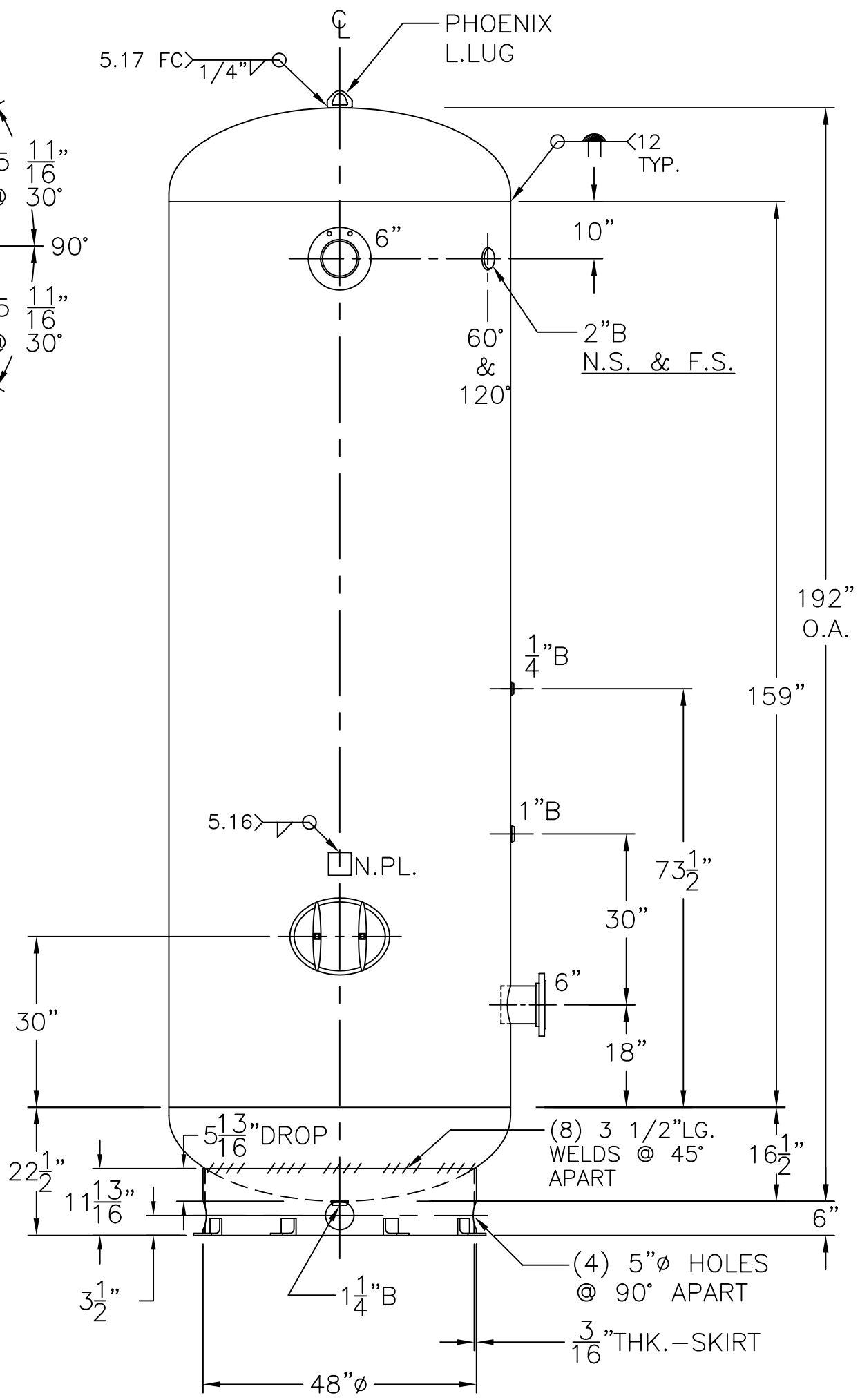

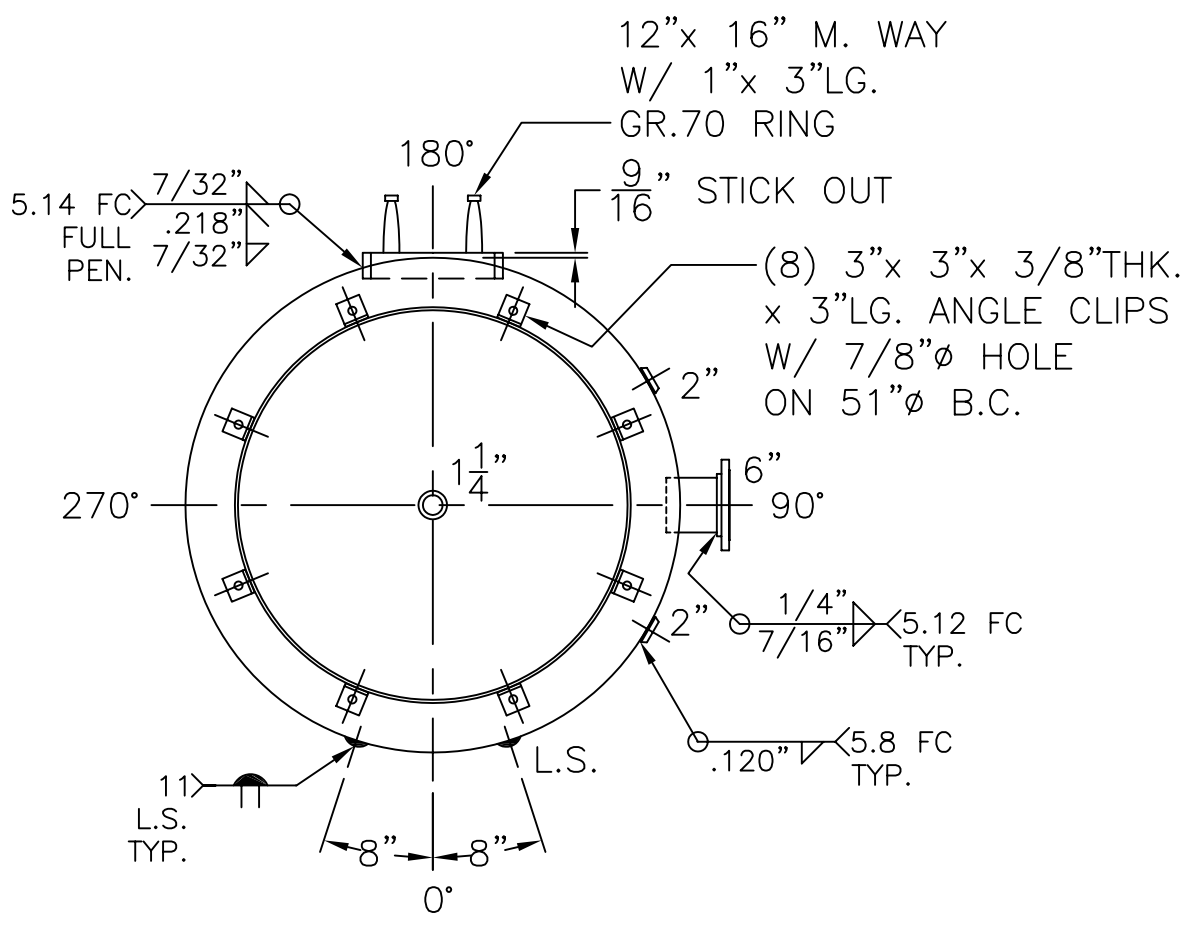

NOTE: 1) HYDRO @ 163 PSIG. MIN.

SHELL / HEADS	
	.248" SA–455 2:1 S.E.
	(.205"MIN.)
	.218" SA–455
M.A.W.P. 125 PSIG. @ 400 °F	
M.D.M.T. –20 °F @ 125 PSIG.	
ASME. SECTION VIII DIV. 1, 2010 ADD 2010	
X–RAY: RT–4 SPOT L.S. NOT G.S.	
GALLONS: 2180	WT. 2954 LBS.
SERIAL NO.	
N.B.	

60–VG–2180–R	REV. 8–8–11
	DATE: 11–10–98
FOR: HANSON STANDARD	
VERT. AIR TANK	
UW–21(b)	
INSIDE: UNPAINTED	
OUTSIDE: PRIME	
CAD "B" SIZE UNDER "STD"–SERIES	
BY: E.S.	SCALE:1/2"=12"

ROY E. HANSON JR. MFG.
1600 E. WASHINGTON BLVD.
LOS ANGELES, CA 90021