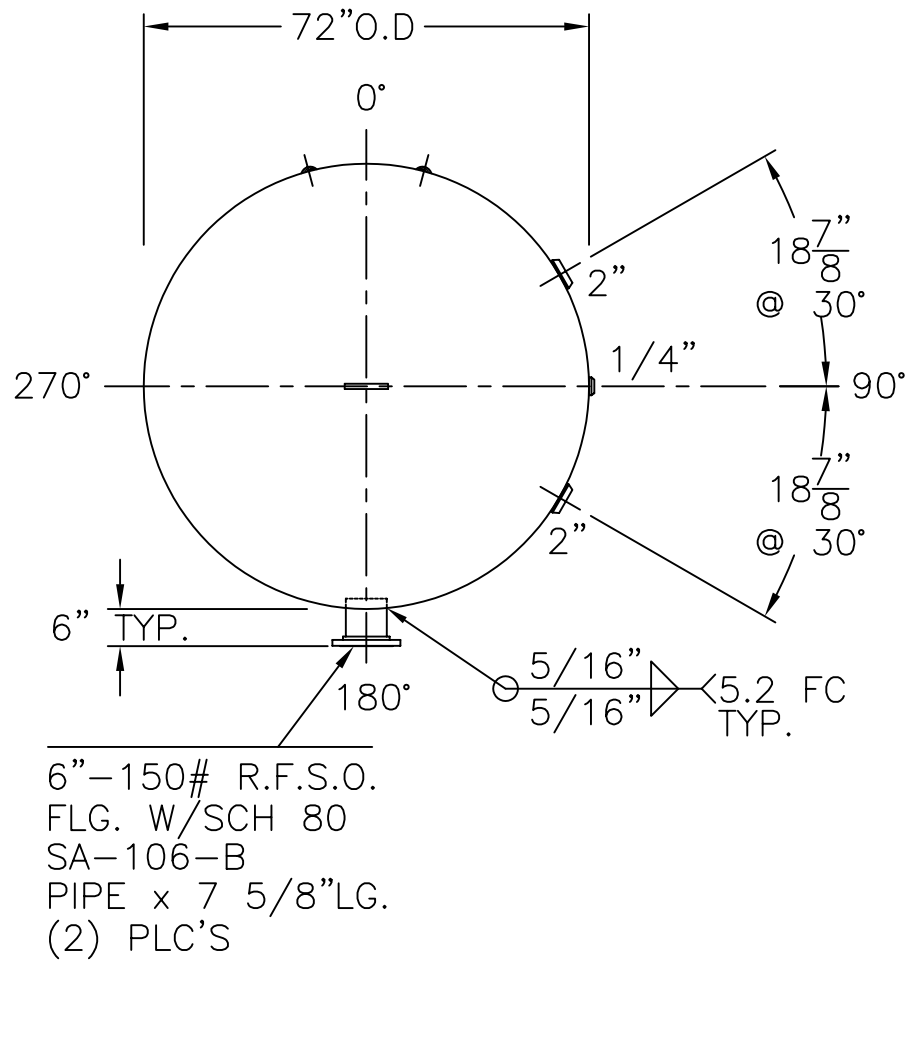

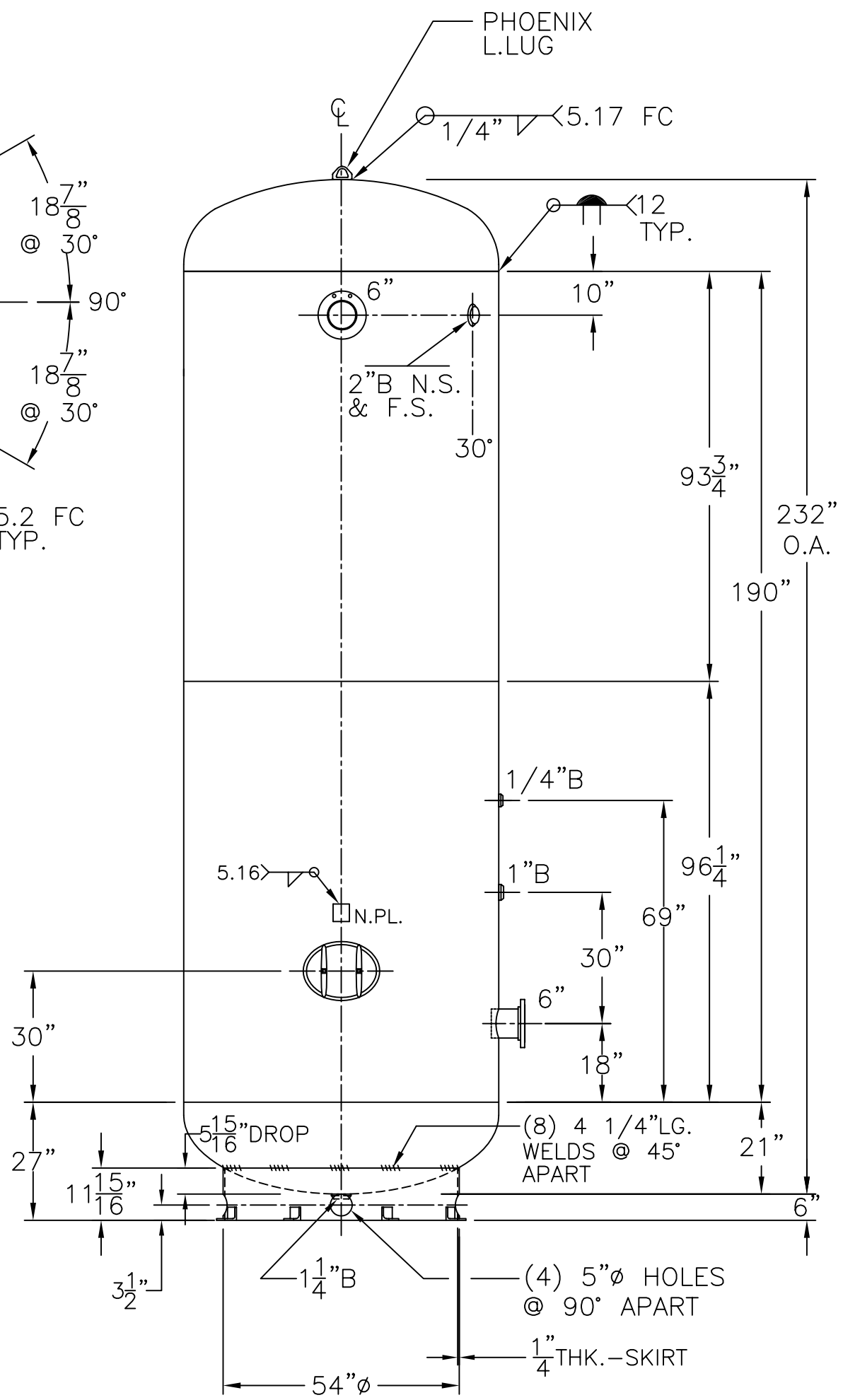

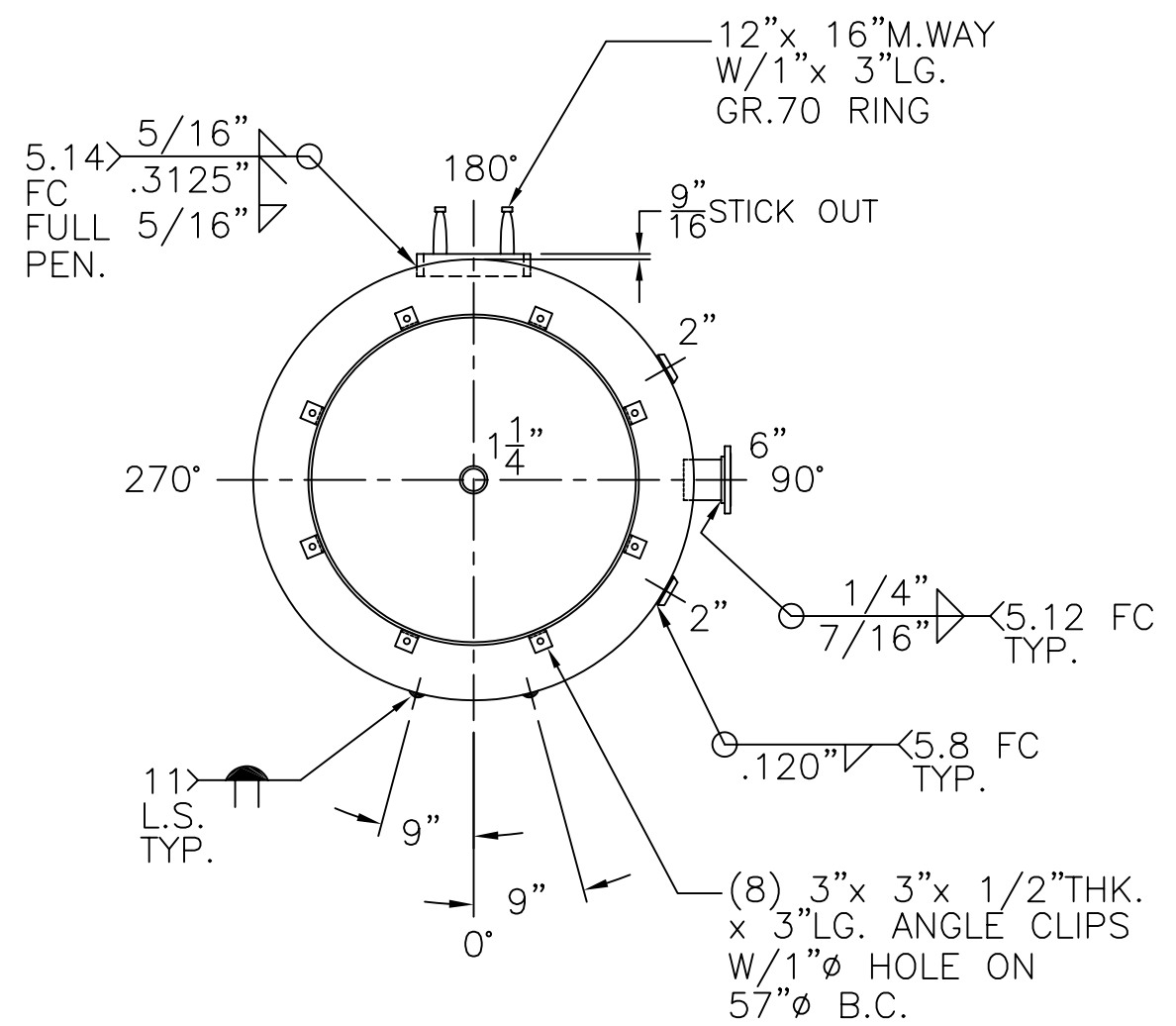

NOTE: 1) HYDRO @ 195 PSIG. MIN.

SHELL / HEADS	
M.A.W.P.	150 PSIG. @ 400 °F
M.D.M.T.	–20 °F 150 PSIG
ASME. SECTION VIII DIV. 1, 2010 ADD 2010	
X–RAY: RT–4 SPOT L.S. & HDS. G.S.	
GALLONS: 3800	WT. 5462 LBS.
SERIAL NO.	
N.B.	

.3125" SA–455	2:1 S.E.
(.255"MIN.)	
.3125" SA–455	

72–VP–3800–R

FOR: HANSON STANDARD

VERT. AIR TANK

UW–21(b)

INSIDE: UNPAINTED

OUTSIDE: PRIME

CAD "B"–SIZE UNDER "STD"–SERIES

BY: J.G. | SCALE: 3/8"=12"

REV. 8–15–11

DATE: 6–11–99

ROY E. HANSON JR. MFG.
1600 E. WASHINGTON BLVD.
LOS ANGELES, CA 90021