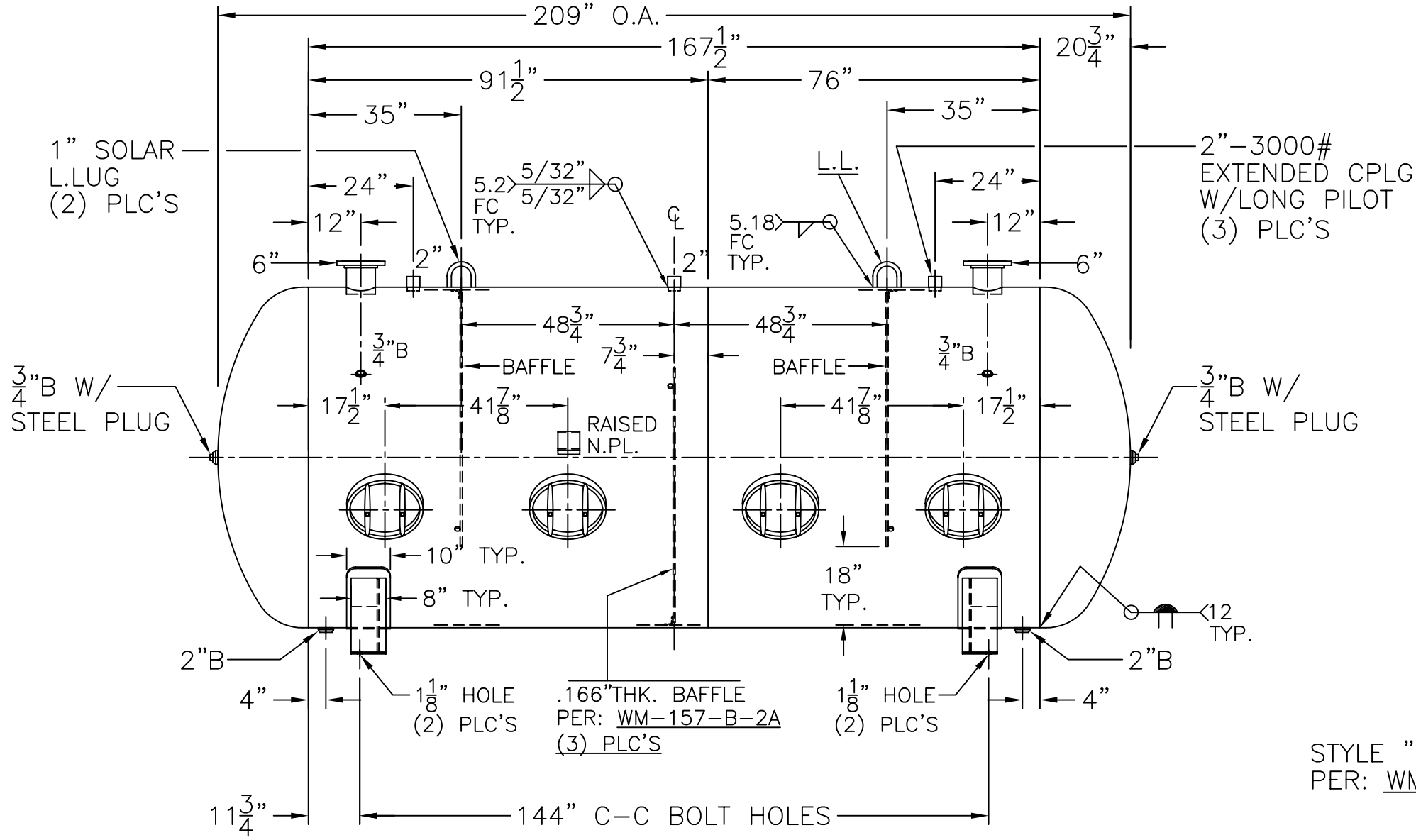

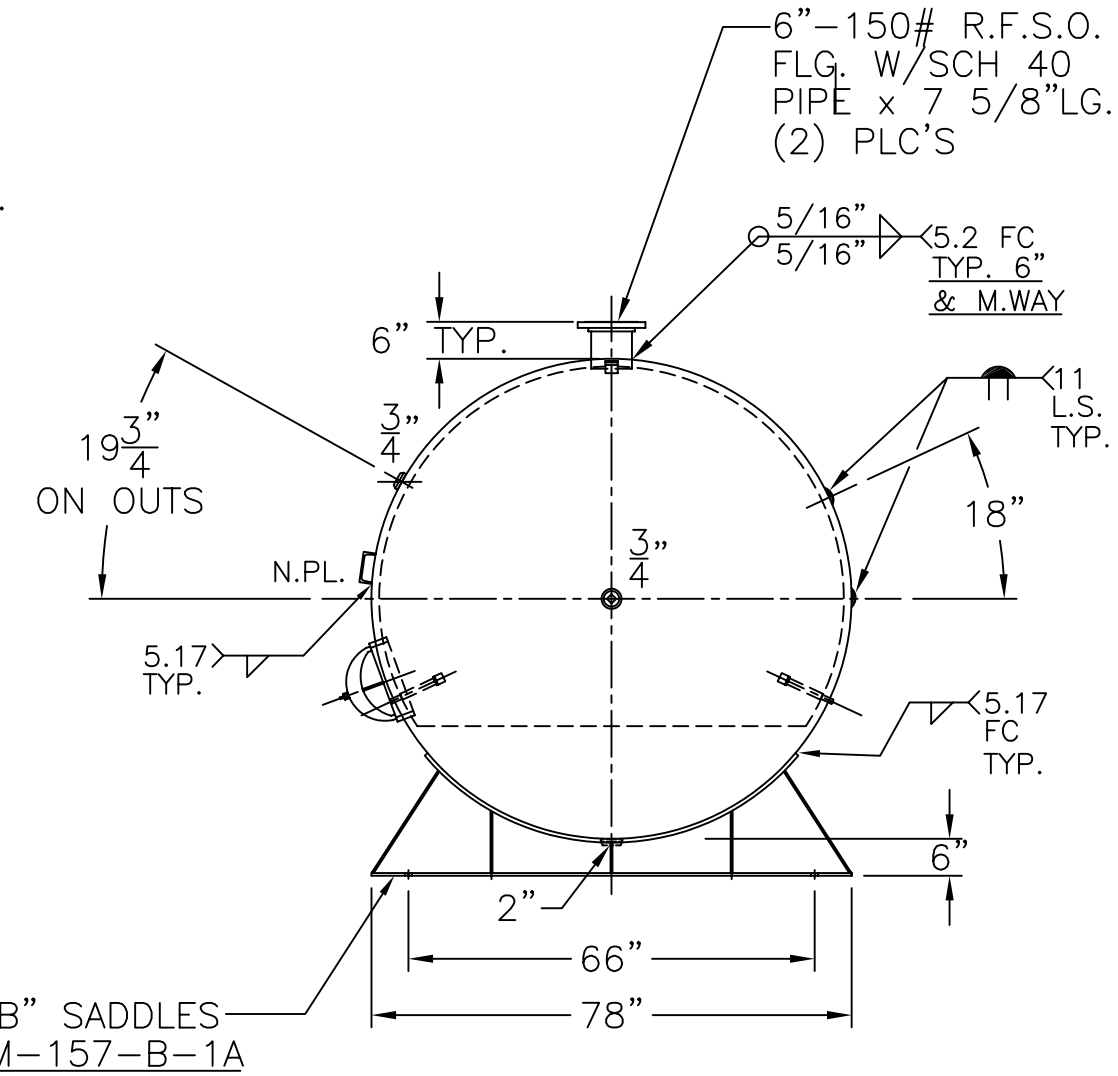

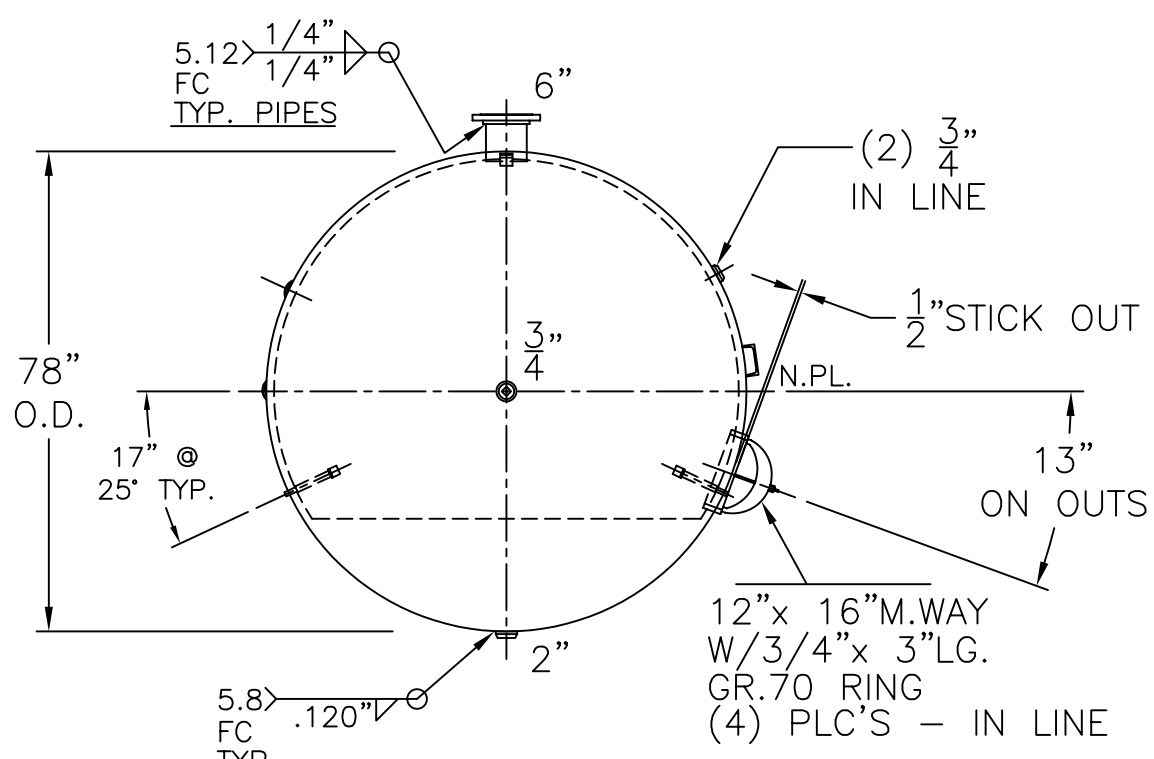

VIEW W/OUT SUPT'S

NOTE: 1) HYDRO @ 134 PSIG. MIN.

SHELL / HEADS	.3125" SA-455 F. & D.	
	64"D.R. & 11 3/4"K.R.	
	.3125" SA-455	
M.A.W.P.	100 PSIG. @ 200 °F	
M.D.M.T.	0 °F 100 PSIG	
ASME. SECTION VIII DIV. 1, 2007 ADD 2007		
X-RAY:	RT-NO	
GALLONS:	4000	WT. 6499 LBS.
SERIAL NO.		
N.B.		

WM-157-B	REV. 2-8-08
	DATE: 12-20-07
FOR: -	
HORIZ. CHILLED WATER TANK.	
SURFACE AREA = 370.7 SQ. FT.	
INSIDE: UNPAINTED	
OUTSIDE: PRIME	
BY: J.G./STEVE	SCALE: 3/8"=12"

ROY E. HANSON JR. MFG.
1600 E. WASHINGTON BLVD.
LOS ANGELES, CA 90021