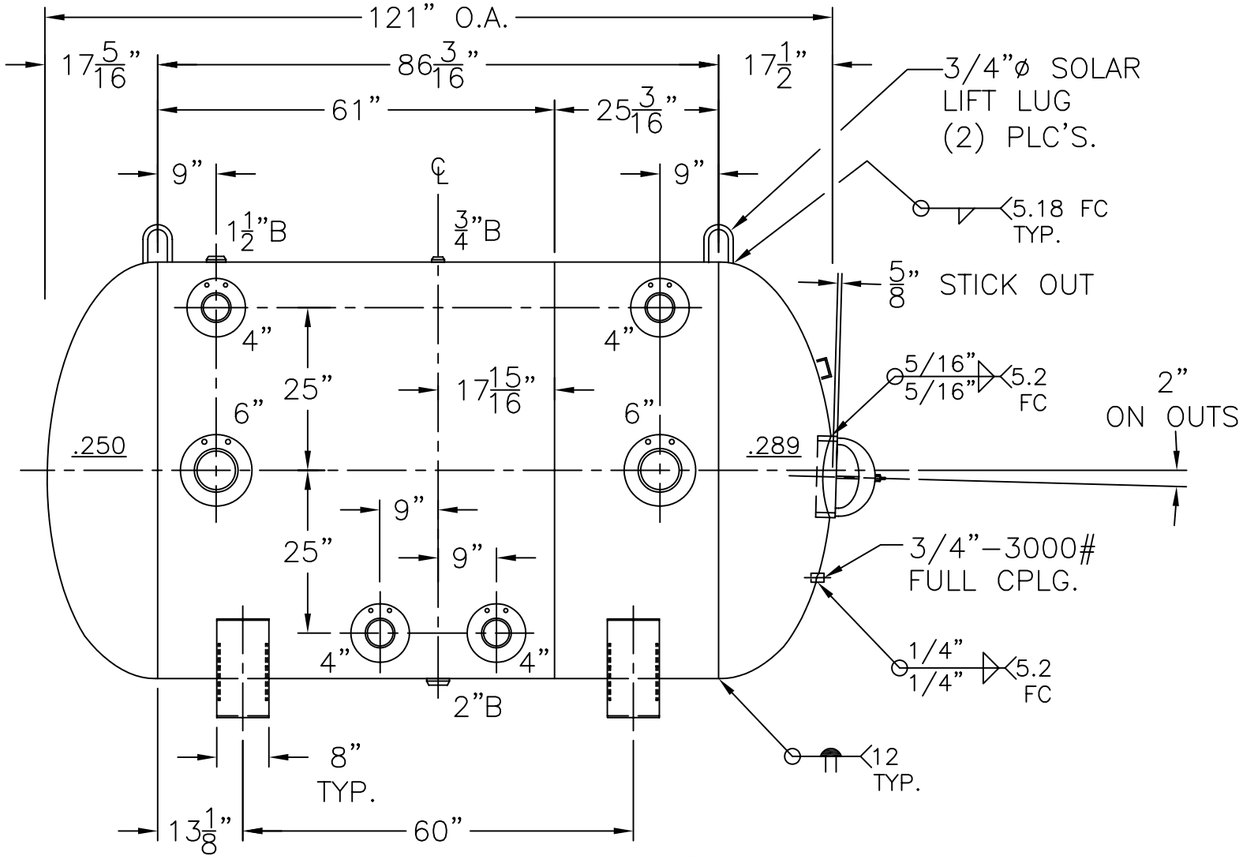

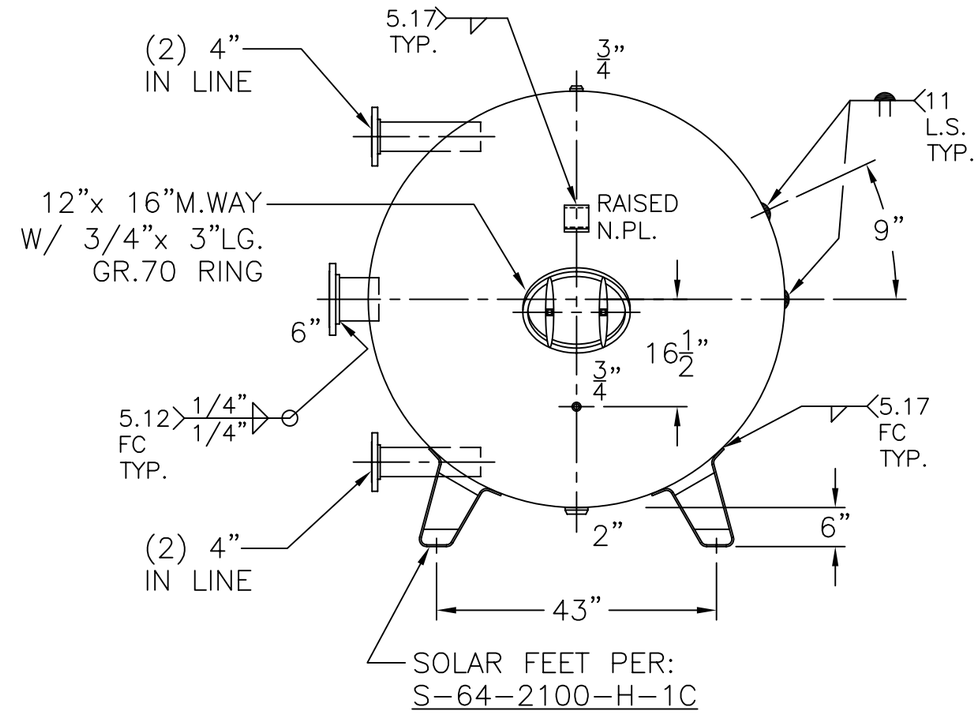

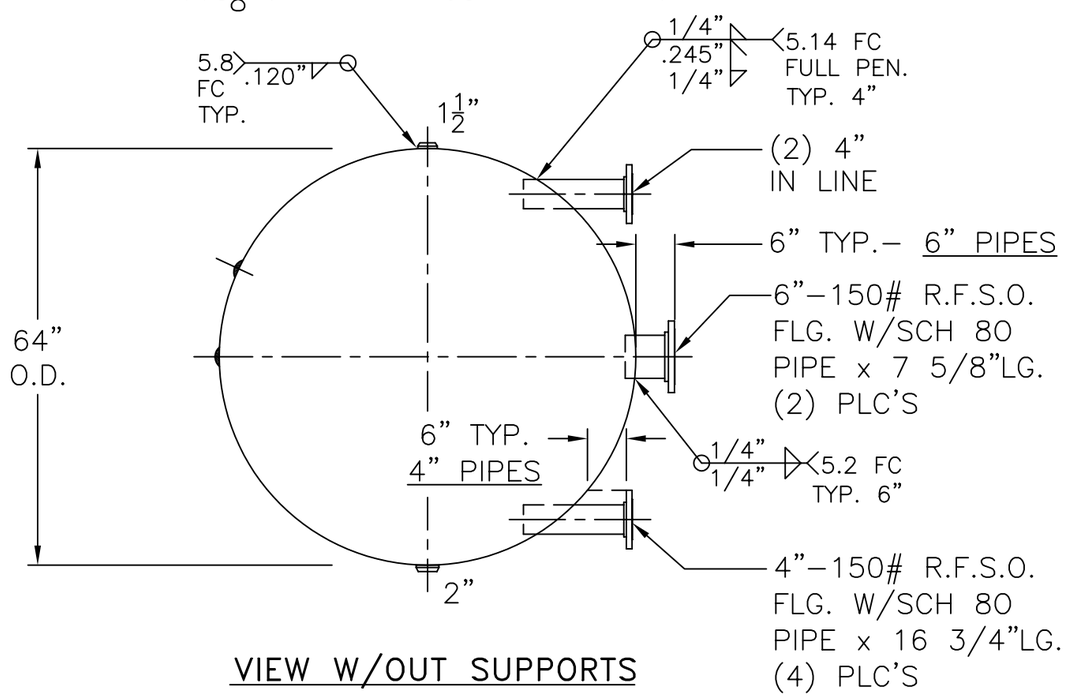

VIEW W/OUT SUPPORTS

NOTE: 1) HYDRO @ 166 PSIG. MIN.

SHELL / HEADS	LEFT-.250" SA-455 2:1 S.E.
	(.233" MIN.)
	RIGHT-.289" SA-455 2:1 S.E.
	(.258" MIN.)
	.245" SA-455
M.A.W.P.	125 PSIG. @ 200 °F
M.D.M.T.	0 °F @ 125 PSIG.
ASME. SECTION VIII	DIV. 1, 2007 ADD. 2007
X-RAY:	RT-4 SPOT L.S. ONLY
GALLONS:	1500 WT. 2636 LBS.
SERIAL NO.	
N.B.	

WM-309-B	REV. 7-1-08
	DATE: 5-20-08
FOR: -	
HORIZ. CHILLED WATER TANK	
SURFACE AREA = 184.3 SQ. FT.	
INSIDE: UNPAINTED	
OUTSIDE: PRIME	
BY: J.G./B.C.	SCALE:1/2"=12"

ROY E. HANSON JR. MFG.
1600 E. WASHINGTON BLVD.
LOS ANGELES, CA 90021