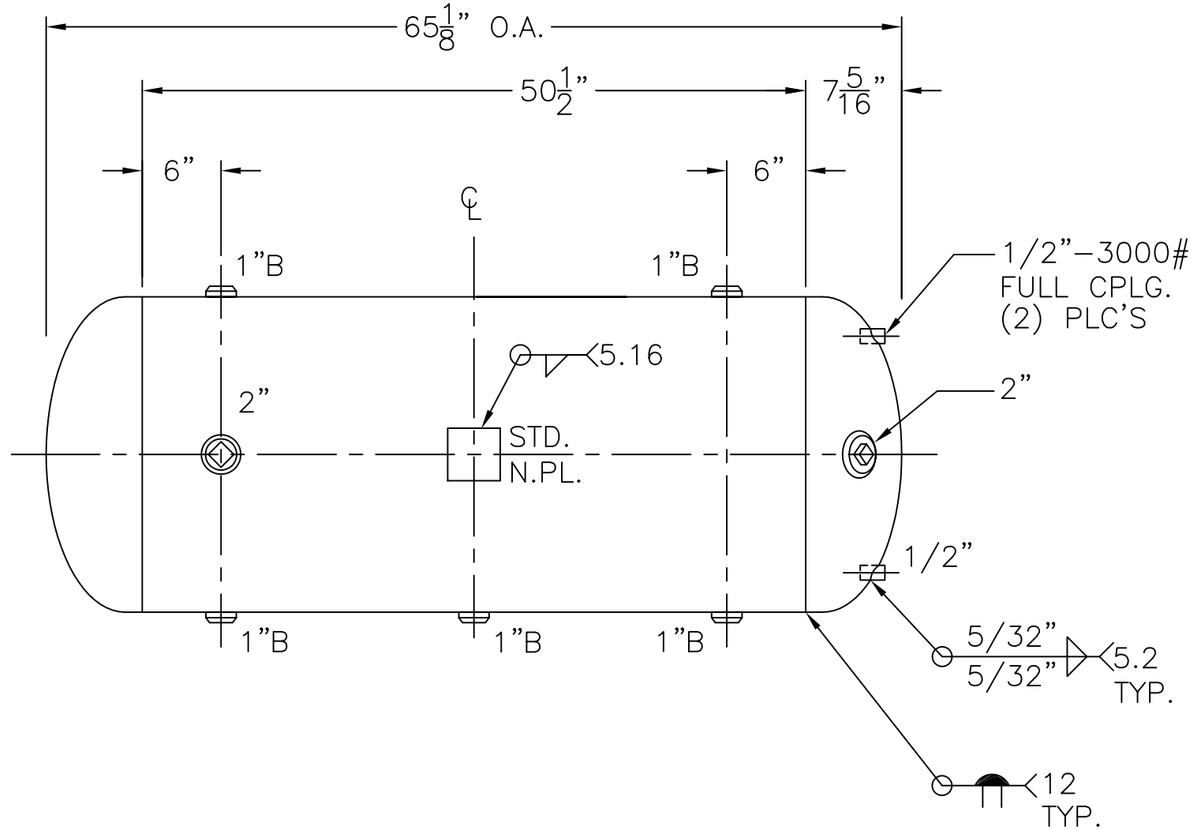

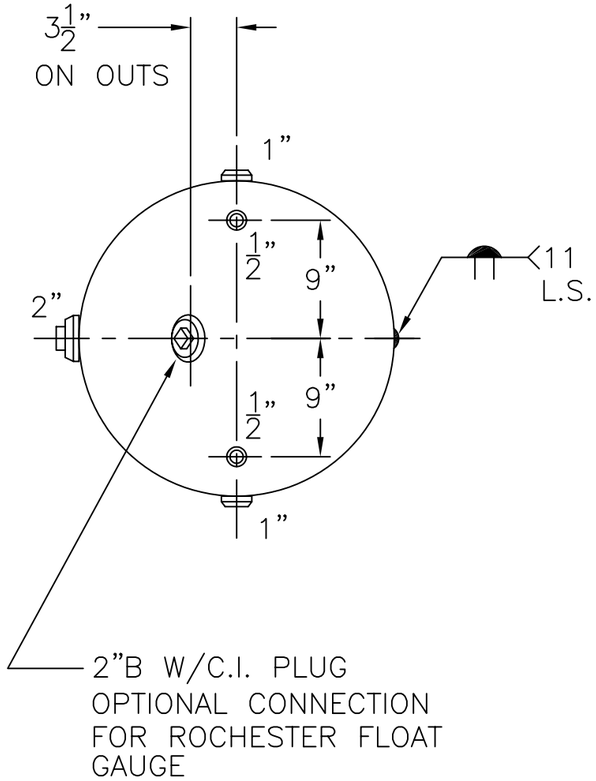

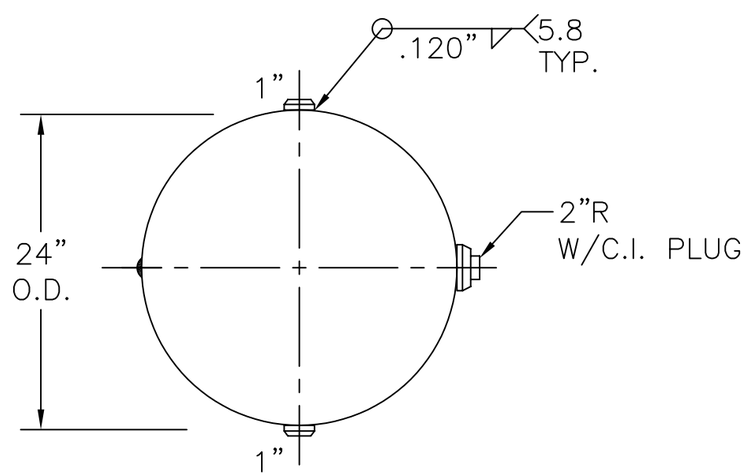

NOTE: 1) HYDRO @ 197 PSIG. MIN.

SHELL / HEADS	.164" SA–414–G 2.1: S.E.	SK–X–120 REV. 5–14–09 DATE: 10–8–68
	JOGGLED	FOR: HANSON STANDARD HORIZ. EXPANSION TANK
	.135" SA–414–G	
		INSIDE: UNPAINTED
M.A.W.P.	150 PSIG. @ 347 °F	
M.D.M.T.	–20 °F @ 150 PSIG.	OUTSIDE: PRIME
ASME. SECTION VIII DIV. 1, 2007 ADD 2008		
X–RAY:	RT–NO	BY: J.G. SCALE: 3/4"=12"
GALLONS:	120 WT. 235 LBS.	ROY E. HANSON JR. MFG.
SERIAL NO.		1600 E. WASHINGTON BLVD. LOS ANGELES, CA 90021
N.B.		