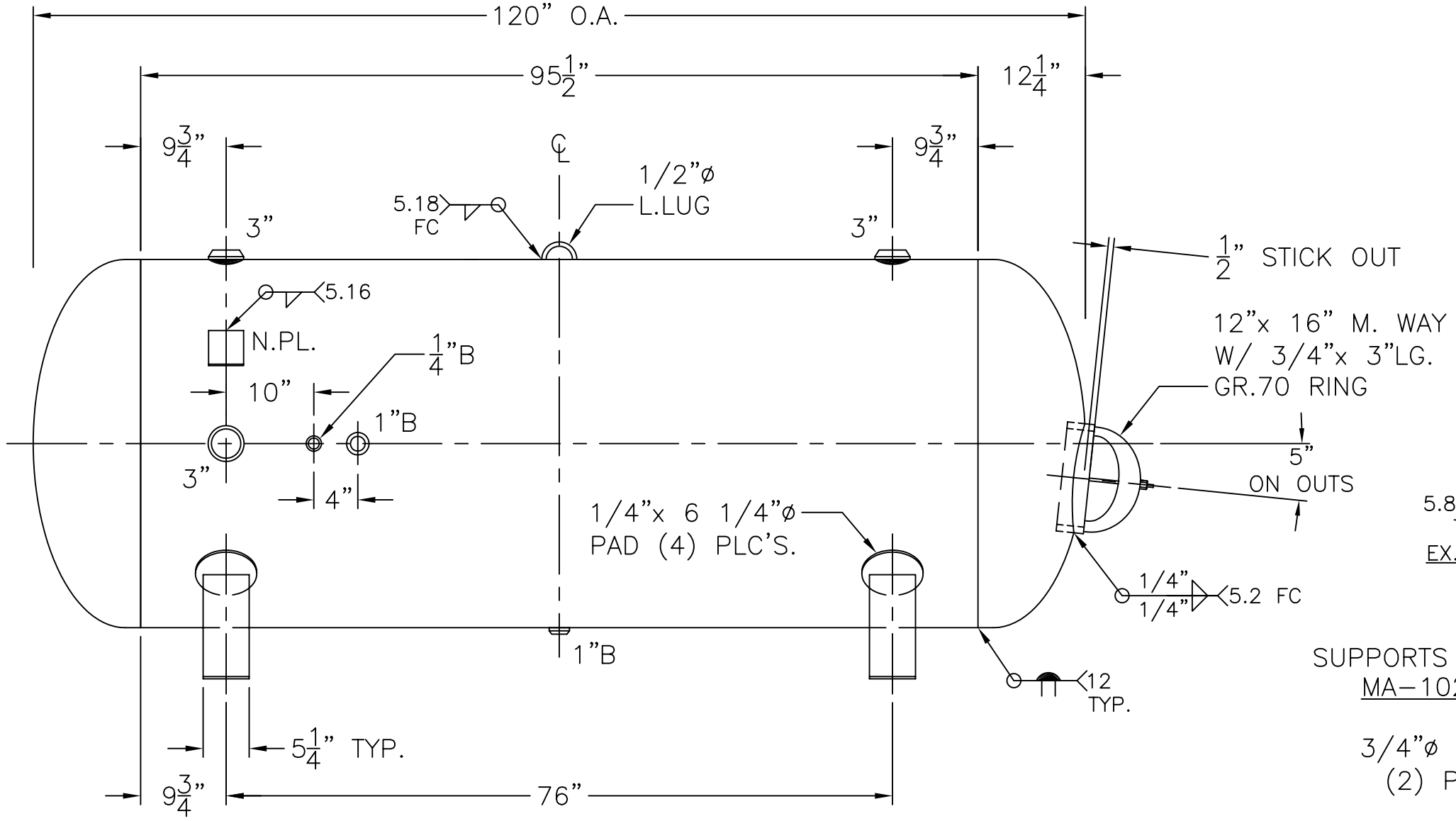

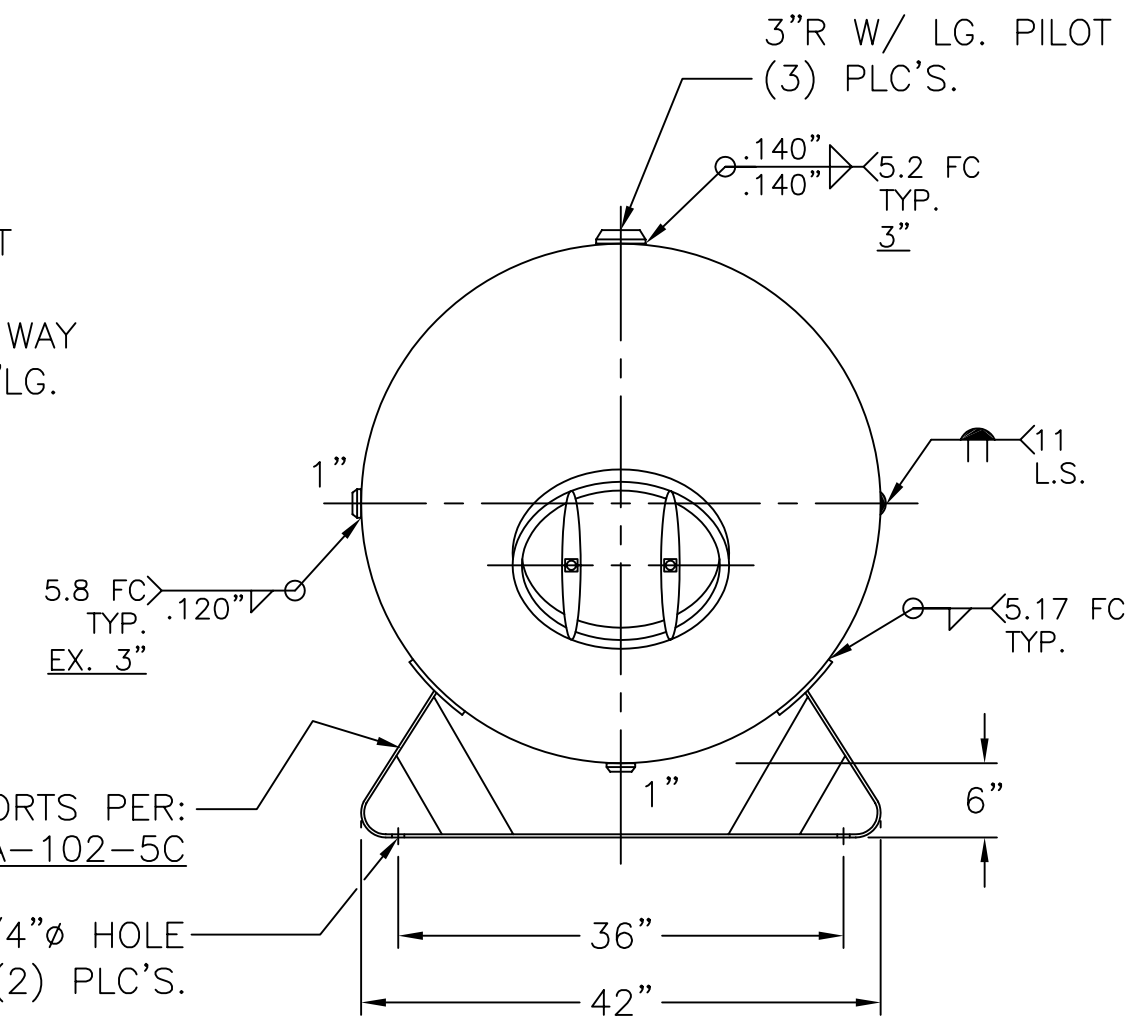

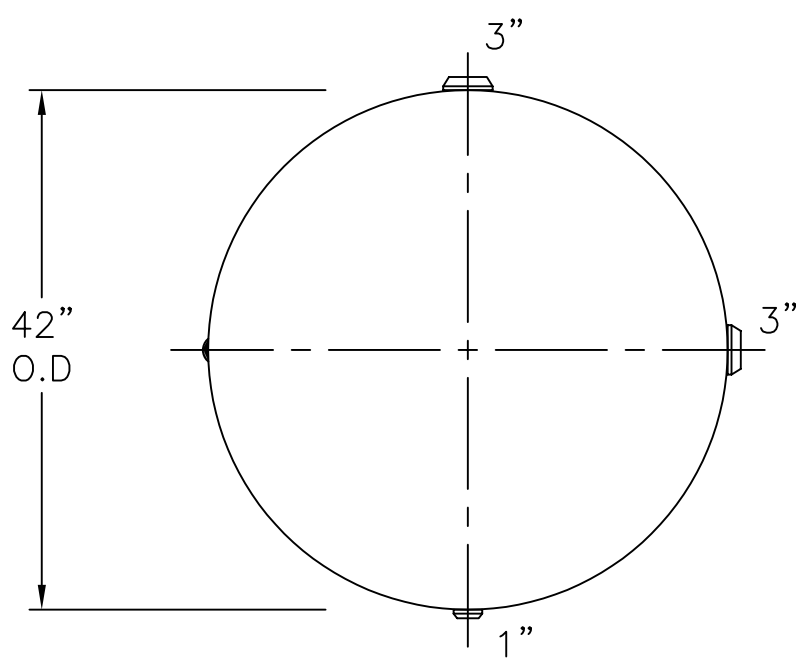

VIEW W/O SUPPORTS

NOTE: 1) HYDRO @ 260 PSIG. MIN.

SHELL / HEADS	.252" SA-455 2:1 S.E.	42-HA-660-W
	JOGGLE - .229" OFFSET	REV. 2-23-11
		DATE: 8-20-02
	.250" SA-455	FOR: HANSON STANDARD
		HORIZ. AIR TANK
		SURFACE AREA = 117.3 SQ. FT.
		INSIDE: UNPAINTED
M.A.W.P. 200 PSIG. @ 400 °F		
M.D.M.T. -20 °F @ 200 PSIG.		OUTSIDE: PRIME
ASME. SECTION VIII DIV. 1, 2010 ADD 2010		CAD-"B" UNDER "STD"-SERIES
X-RAY: RT-4 SPOT L.S. ONLY		BY: E.S. / SCALE: 3/4"=12"
GALLONS: 660	WT. 1314 LBS.	ROY E. HANSON JR. MFG.
SERIAL NO.		1600 E. WASHINGTON BLVD.
N.B.		LOS ANGELES, CA 90021