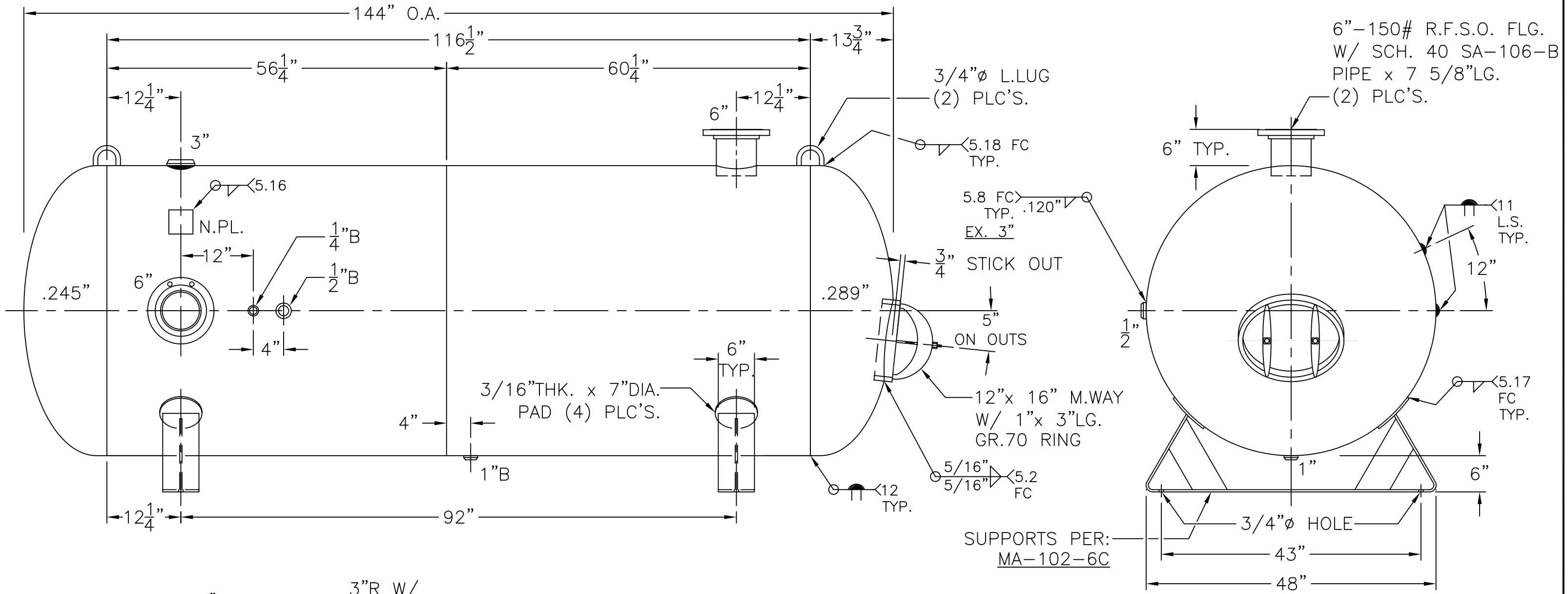

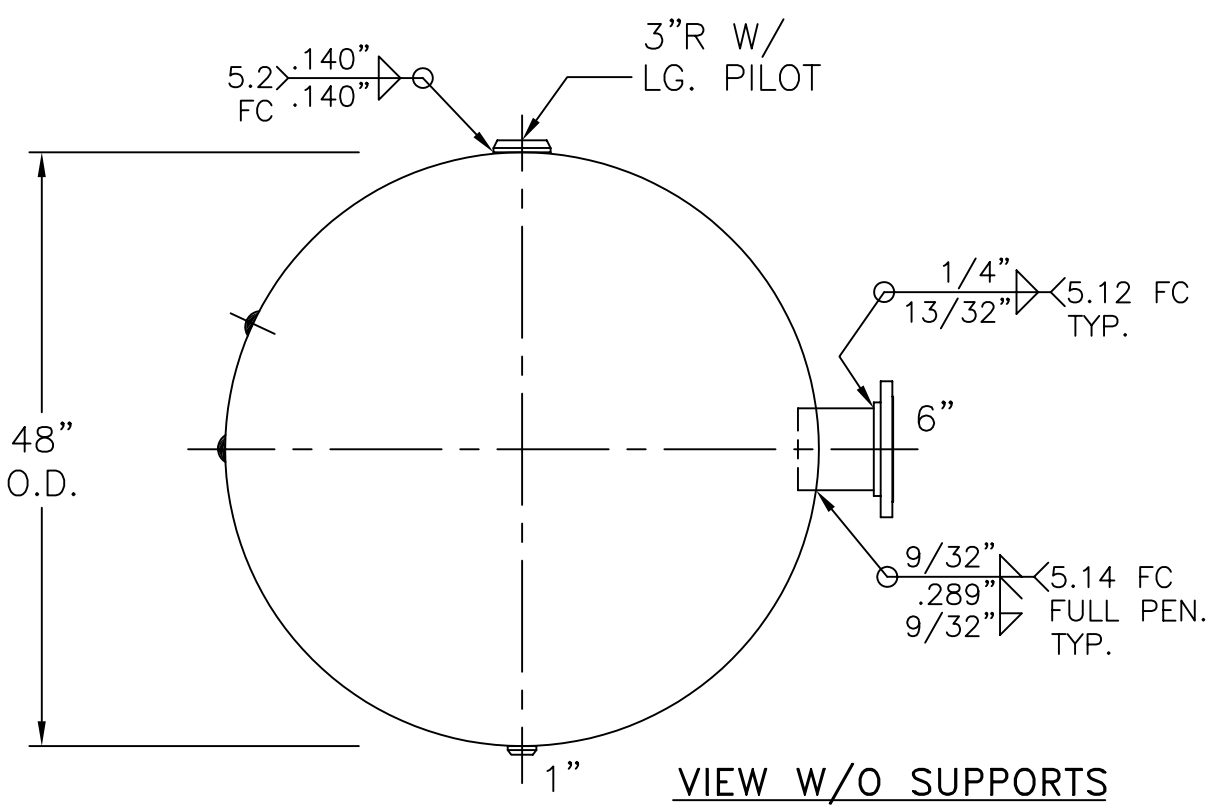

VIEW W/O SUPPORTS

NOTE: 1) HYDRO TEST @ 260 PSIG. MIN.

SHELL / HEADS	LEFT – .245" SA-455 2:1 S.E.	48-HA-1060-W — REV. 8-17-11
	JOGGLE	DATE: 6-19-92
	RIGHT-.289" SA-455 2:1 S.E.	FOR: HANSON STANDARD
	JOGGLE	HORIZ. AIR TANK
	.289" SA-455	
		UW-21(b)
		INSIDE: UNPAINTED
M.A.W.P. 200 PSIG. @ 400 °F		
M.D.M.T. -20 °F @ 200 PSIG.		OUTSIDE: PRIME
ASME. SECTION VIII DIV. 1, 2010 ADD 2010		CAD-"B" SIZE UNDER "STD"-SERIES
X-RAY: RT-4 SPOT L.S. & LEFT G.S.		BY: E.S. — SCALE: 3/4"=12"
GALLONS: 1060	WT. 2303 LBS.	ROY E. HANSON JR. MFG.
SERIAL NO.		1600 E. WASHINGTON BLVD.
N.B.		LOS ANGELES, CA 90021