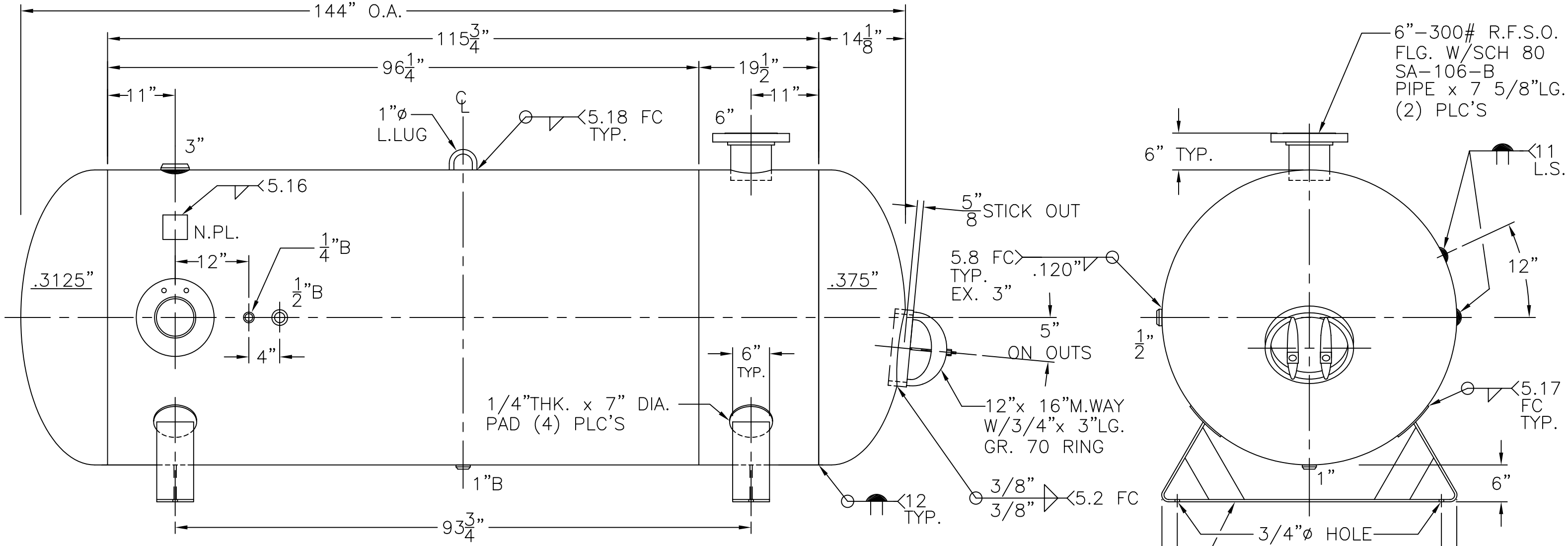

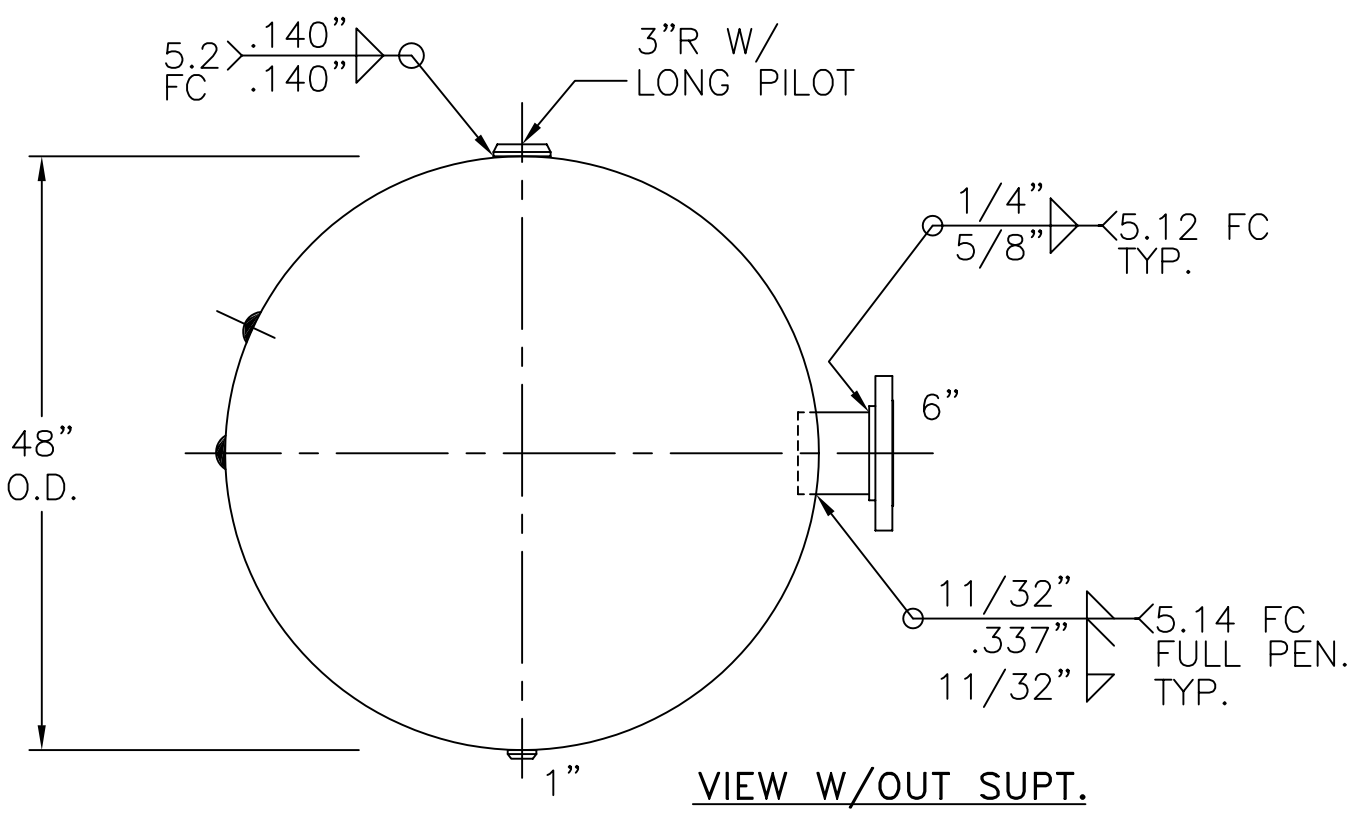

VIEW W/OUT SUPT.

NOTE: 1) HYDRO TEST @ 325 PSIG. MIN.

SHELL/HEADS	LEFT – .3125" SA-516-70 2:1 S.E.	48-HC-1060-W
	(.297" MIN.) JOGGLE	REV. 8-17-11
	RIGHT – .375: SA-455 2:1 S.E.	DATE: 2-27-02
	(.375" MIN.)	FOR: HANSON STANDARD
	.337" SA-455	HORIZ. AIR TANK.
		UW-21(b)
M.A.W.P.	250 PSIG. @ 400 °F	INSIDE: UNPAINTED
M.D.M.T.	-20 °F 250 PSIG.	
ASME. SECTION VIII DIV. 1, 2010 ADD 2010		OUTSIDE: PRIME
X-RAY: RT-4 SPOT L.S. &		CAD-"B" SIZE UNDER "STD"-SERIES
SPOT LEFT HEAD G.S. ONLY		BY: J.G. SCALE: 3/4"=12"
GALLONS: 1060	WT. 2500 LBS.	ROY E. HANSON JR. MFG.
SERIAL NO.		1600 E. WASHINGTON BLVD.
N.B.		LOS ANGELES, CA 90021