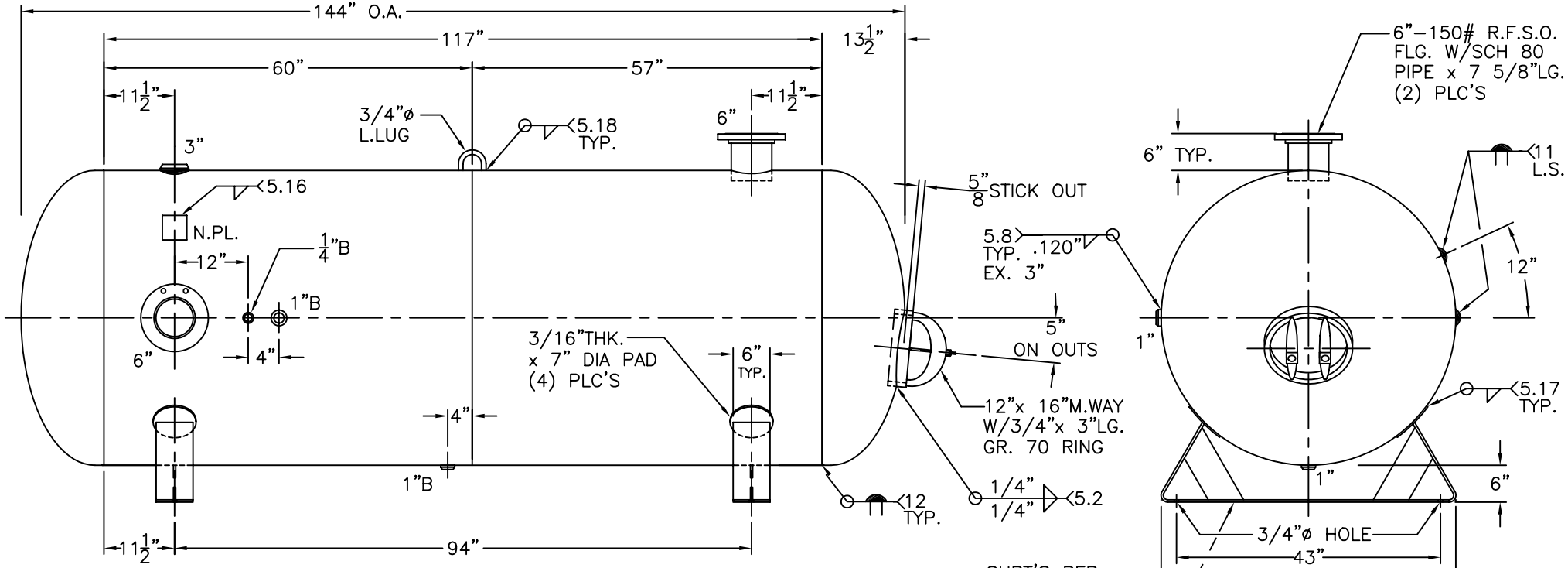

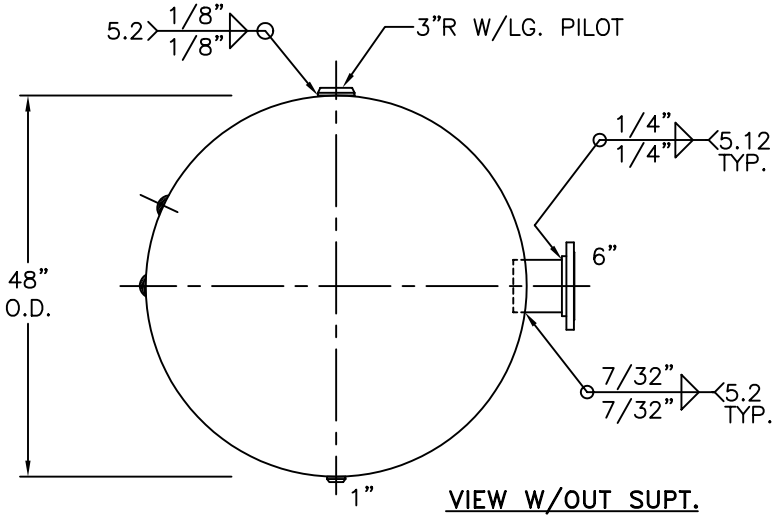

VIEW W/OUT SUPT.

NOTE: 1) HYDRO TEST @ 179 PSIG. MIN.

SHELL / HEADS	.245" SA-36 2:1 S.E.	48-HQ-1060-W REV. 6-18-04 DATE: 8-18-02
	JOGGLE	FOR: HANSON STANDARD HORIZ. AIR TANK.
	.200" SA-455	
		INSIDE: UNPAINTED
M.A.W.P.	137 PSIG. @ 400 °F	
M.D.M.T.	-20 °F 137 PSIG.	OUTSIDE: PRIME
ASME. SECTION VIII DIV. 1, 2001 ADD 2003		CAD "B" SIZE UNDER "STD"-SERIES
X-RAY:	RT-4 SPOT L.S. ONLY	BY: J.G. SCALE: 3/4"=12"
GALLONS:	1060 WT. 1754 LBS.	ROY E. HANSON JR. MFG.
SERIAL NO.		1924 COMPTON AVE. LOS ANGELES, CA 90011
N.B.		