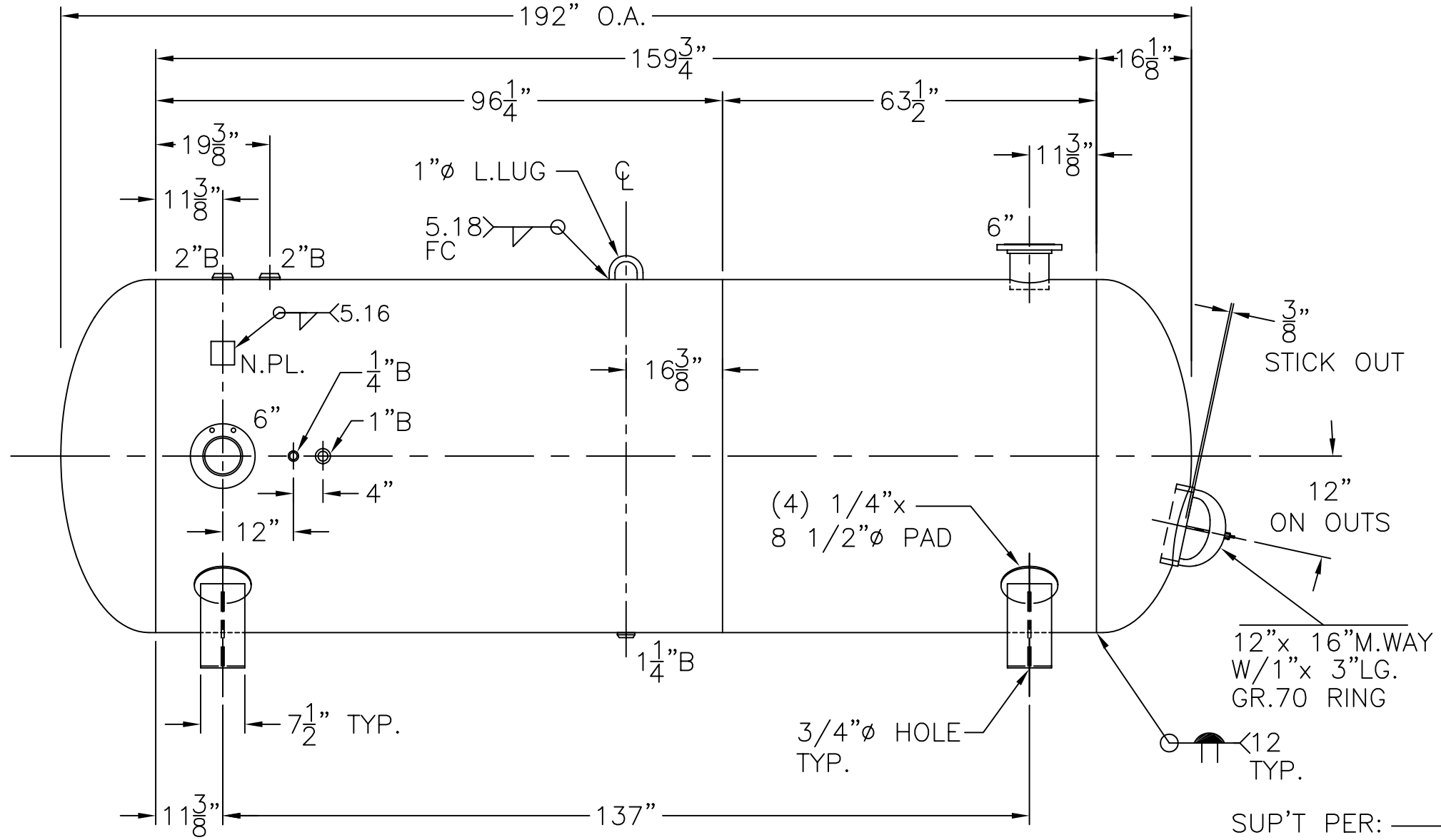

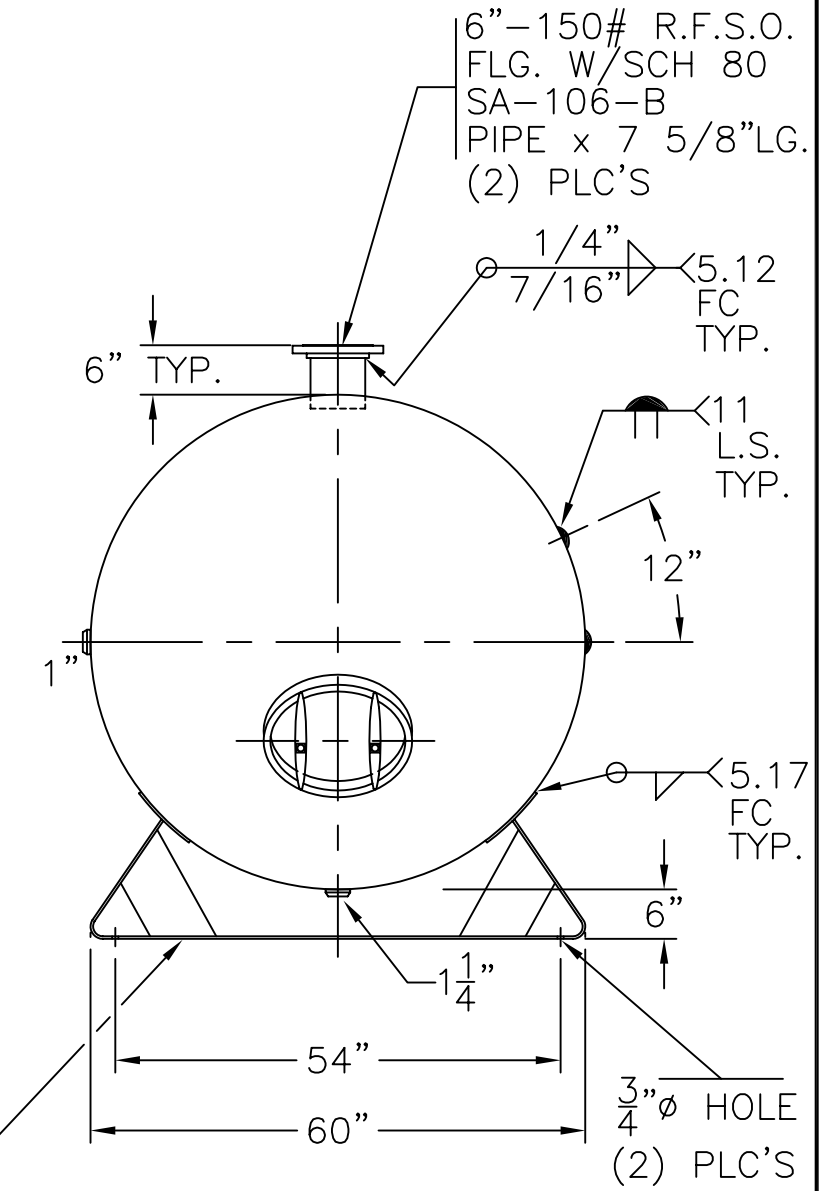

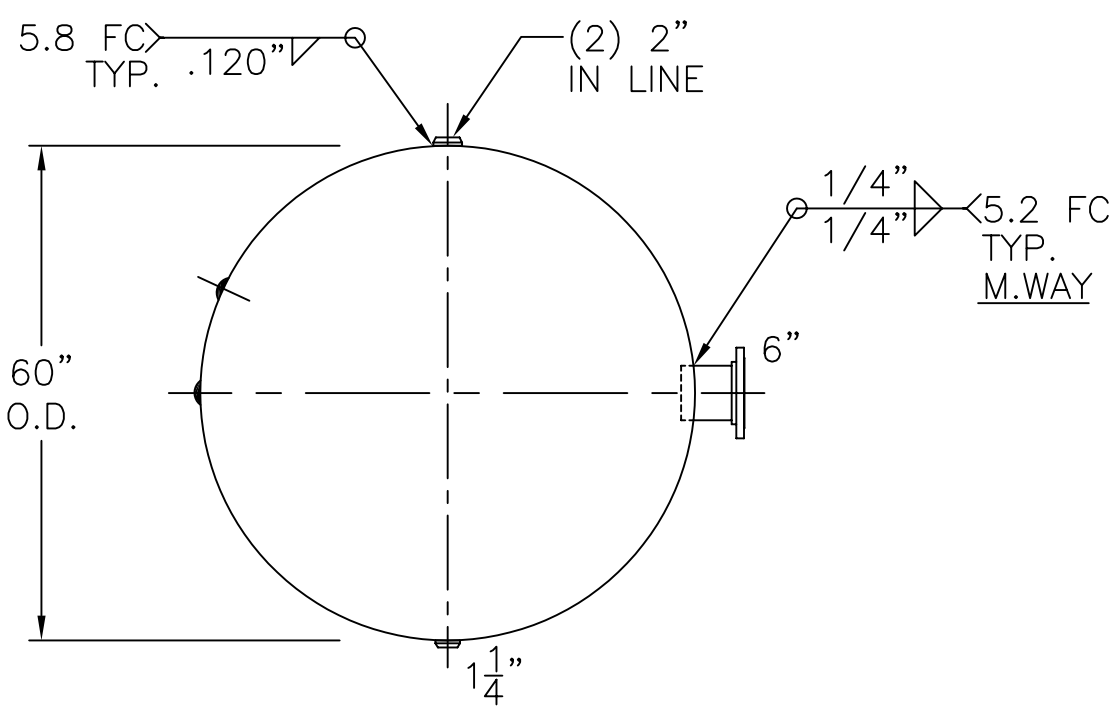

END VIEW W/OUT SUPT'S

NOTE: 1) HYDRO @ 163 PSIG. MIN.

SHELL / HEADS	.248" SA-455 2:1 S.E.	60-HG-2180-W	REV. 8-22-11
	(.209"MIN.) - LEFT		DATE: 10-3-80
	(.223"MIN.) - RIGHT	FOR: HANSON STANDARD	
		HORIZ. AIR TANK	
	.218" SA-455	UW-21(b)	
		INSIDE: UNPAINTED	
M.A.W.P. 125 PSIG. @ 400 °F			
M.D.M.T. -20 °F @ 125 PSIG.		OUTSIDE: PRIME	
ASME. SECTION VIII DIV. 1, 2010 ADD 2010		CAD-"B" SIZE UNDER "STD"-SERIES	
X-RAY: RT-4 SPOT L.S. ONLY		BY: J.G.	SCALE:1/2"=12"
GALLONS: 2180	WT. 2950 LBS.	ROY E. HANSON JR. MFG.	
SERIAL NO.		1600 E. WASHINGTON BLVD.	
N.B.		LOS ANGELES, CA 90021	