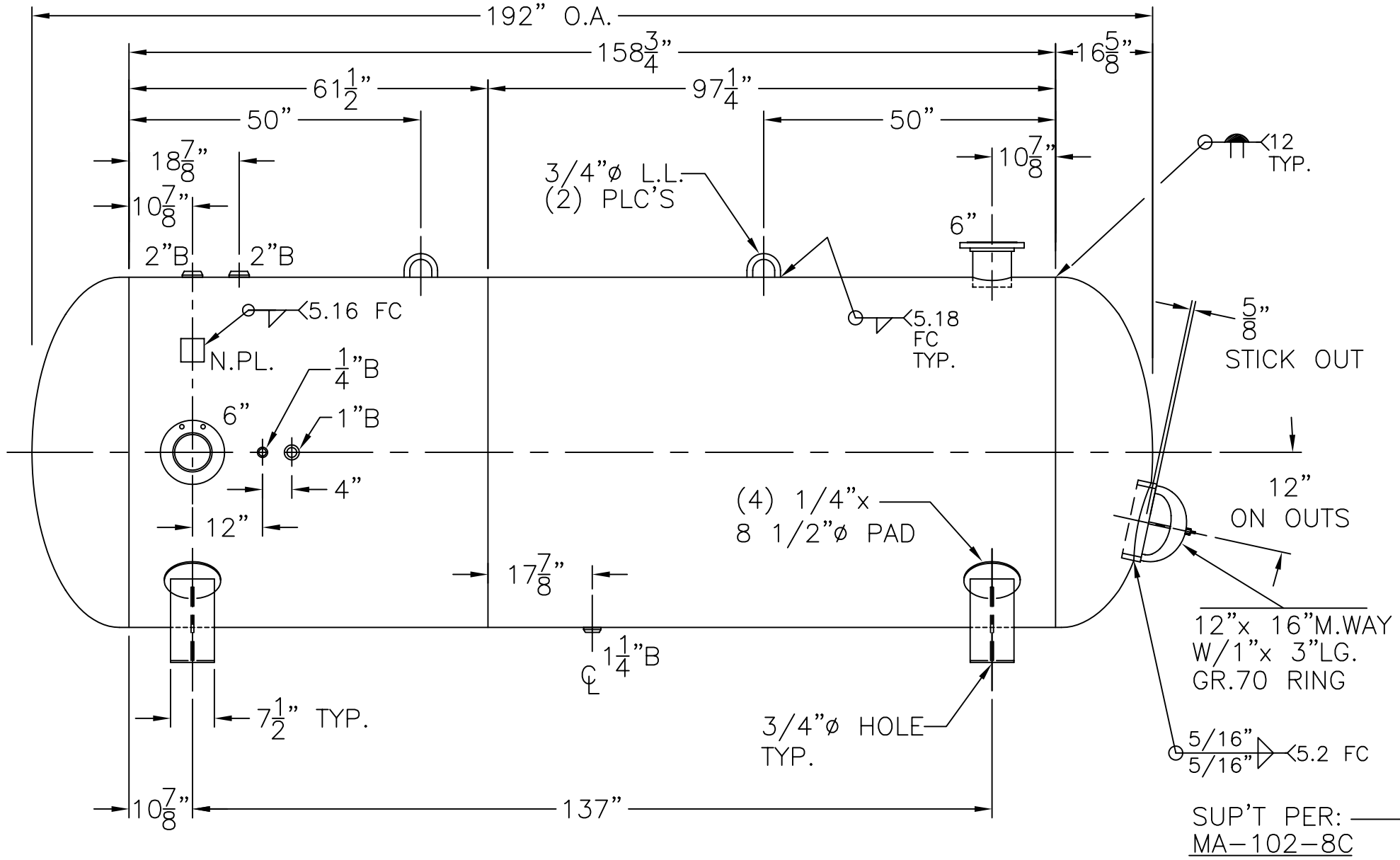

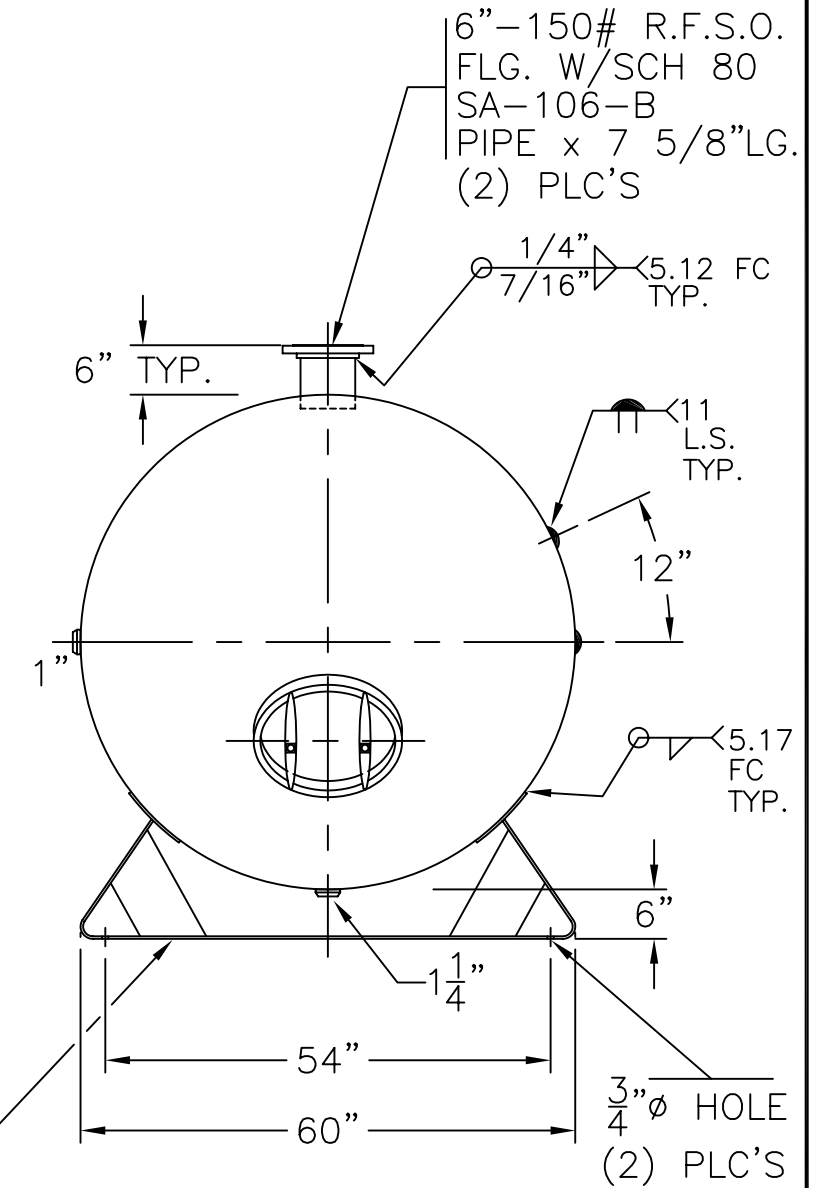

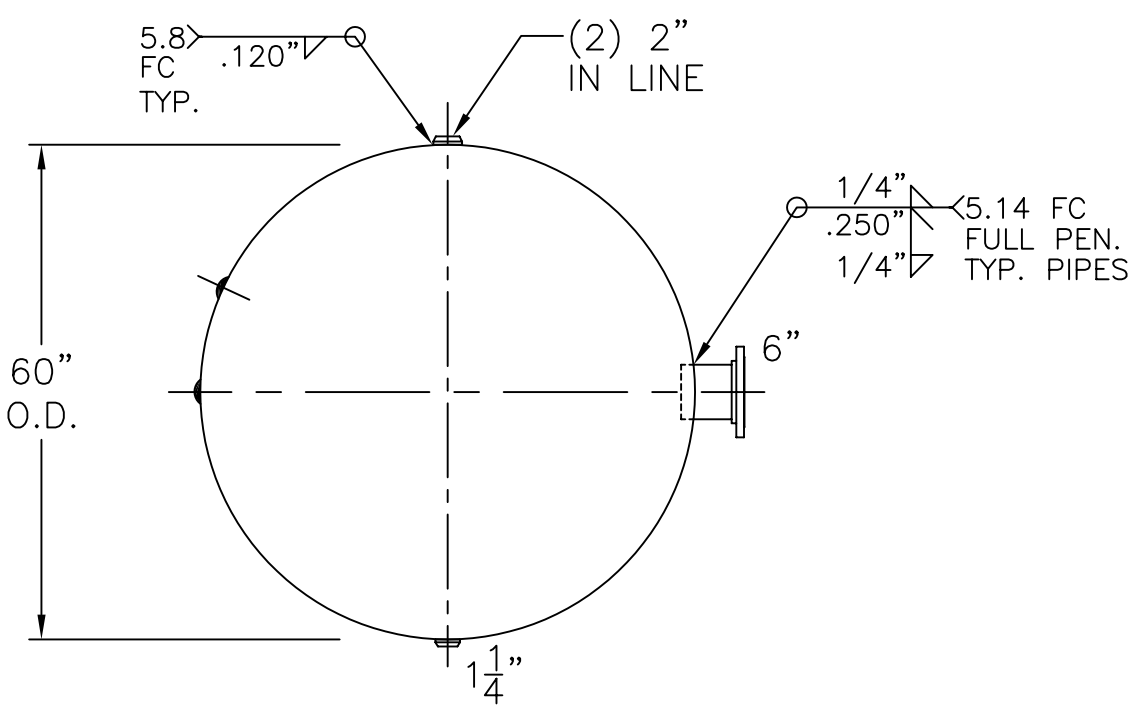

END VIEW W/OUT SUPT'S

NOTE: 1) HYDRO @ 195 PSIG. MIN.

SHELL / HEADS	.289" SA-455 2:1 S.E.	60-HP-2180-W
	(.249"MIN.)	REV. 8-22-11
		DATE: 10-14-92
		FOR: HANSON STANDARD
		HORIZ. AIR TANK
	.250" SA-455	UW-21(b)
		INSIDE: UNPAINTED
M.A.W.P.	150 PSIG. @ 400 °F	
M.D.M.T.	-20 °F @ 150 PSIG.	OUTSIDE: PRIME
ASME. SECTION VIII	DIV. 1, 2010 ADD 2010	CAD-"B" SIZE UNDER "STD"-SERIES
X-RAY:	RT-4 SPOT L.S. ONLY	BY: J.G. SCALE:1/2"=12"
GALLONS:	2180 WT. 3188 LBS.	ROY E. HANSON JR. MFG.
SERIAL NO.		1600 E. WASHINGTON BLVD.
N.B.		LOS ANGELES, CA 90021