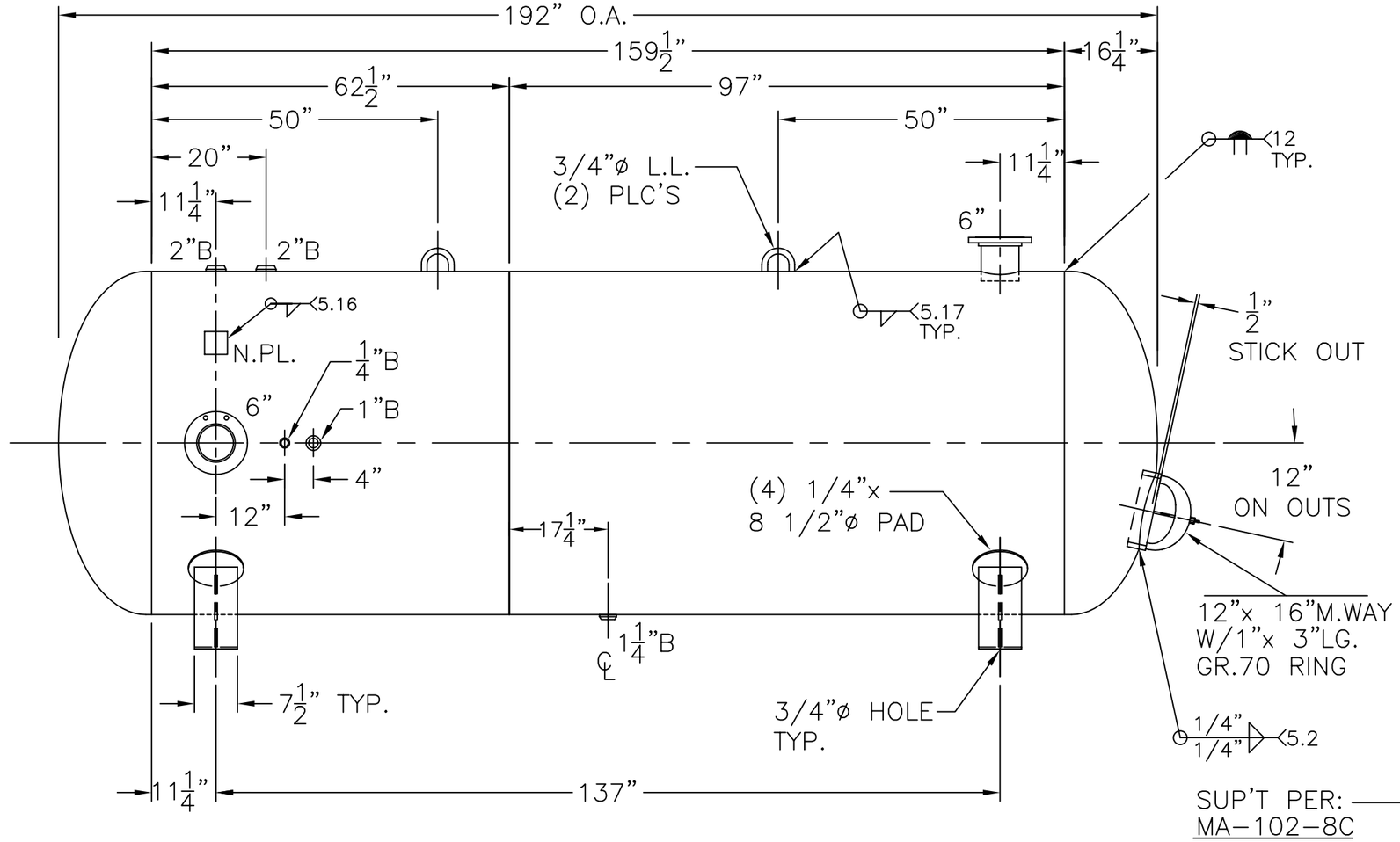

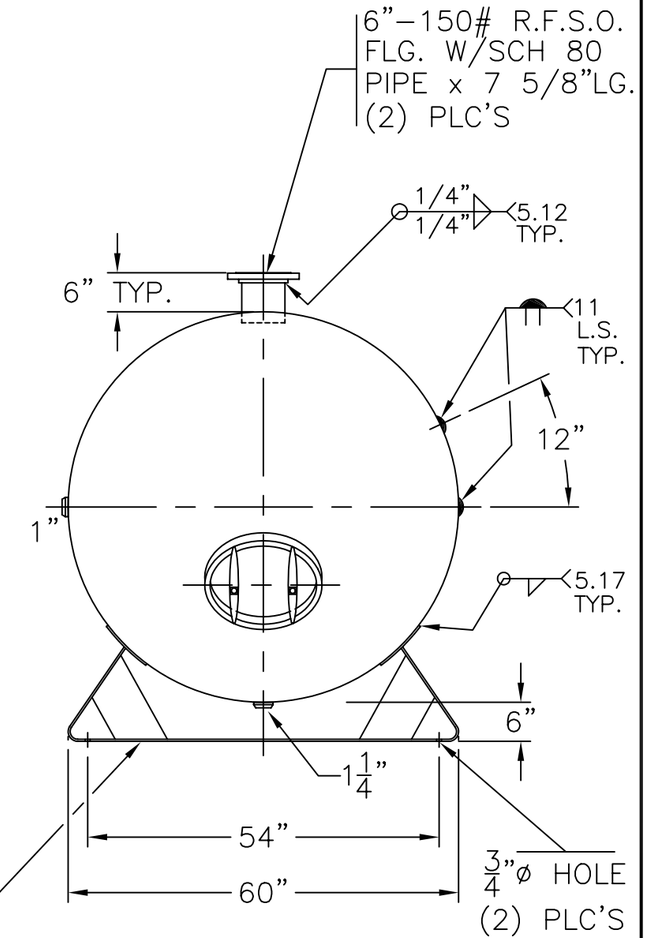

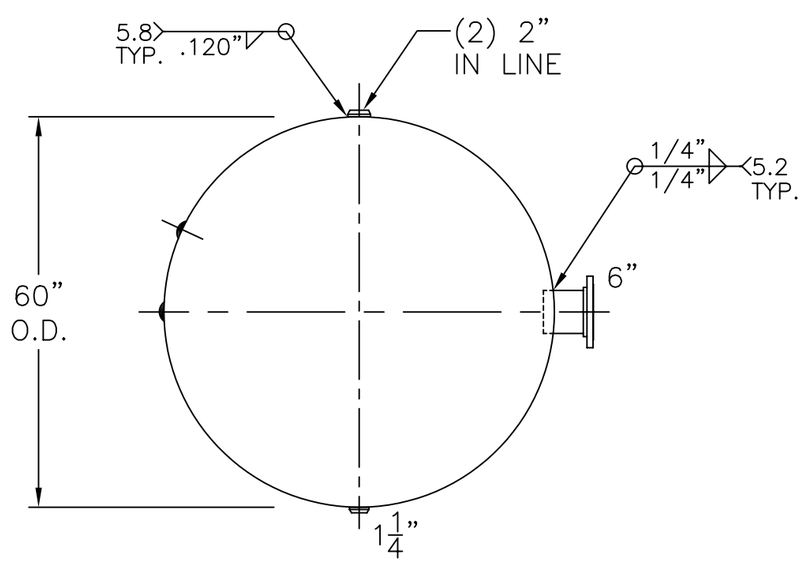

END VIEW W/OUT SUPT'S

NOTE: 1) HYDRO @ 181 PSIG. MIN.

SHELL / HEADS	LEFT – .248" SA-455 2:1 S.E. (.194"MIN.)	60-HQ-2180-W
	RIGHT – .248" SA-455 2:1 S.E. (.223"MIN.)	REV. 5-16-06
	.248" SA-455	DATE: 9-26-80
		FOR: HANSON STANDARD HORIZ. AIR TANK
		INSIDE: UNPAINTED
M.A.W.P.	137 PSIG. @ 400 °F	
M.D.M.T.	-20 °F @ 137 PSIG.	OUTSIDE: PRIME
ASME. SECTION VIII	DIV. 1, 2004 ADD 2005	CAD-"B" SIZE UNDER "STD"-SERIES
X-RAY: RT-4 SPOT L.S. & HDS. G.S.		BY: J.G. / SCALE: 1/2"=12"
GALLONS: 2180	WT. 3228 LBS.	ROY E. HANSON JR. MFG.
SERIAL NO.		1600 E. WASHINGTON BLVD.
N.B.		LOS ANGELES, CA 90021