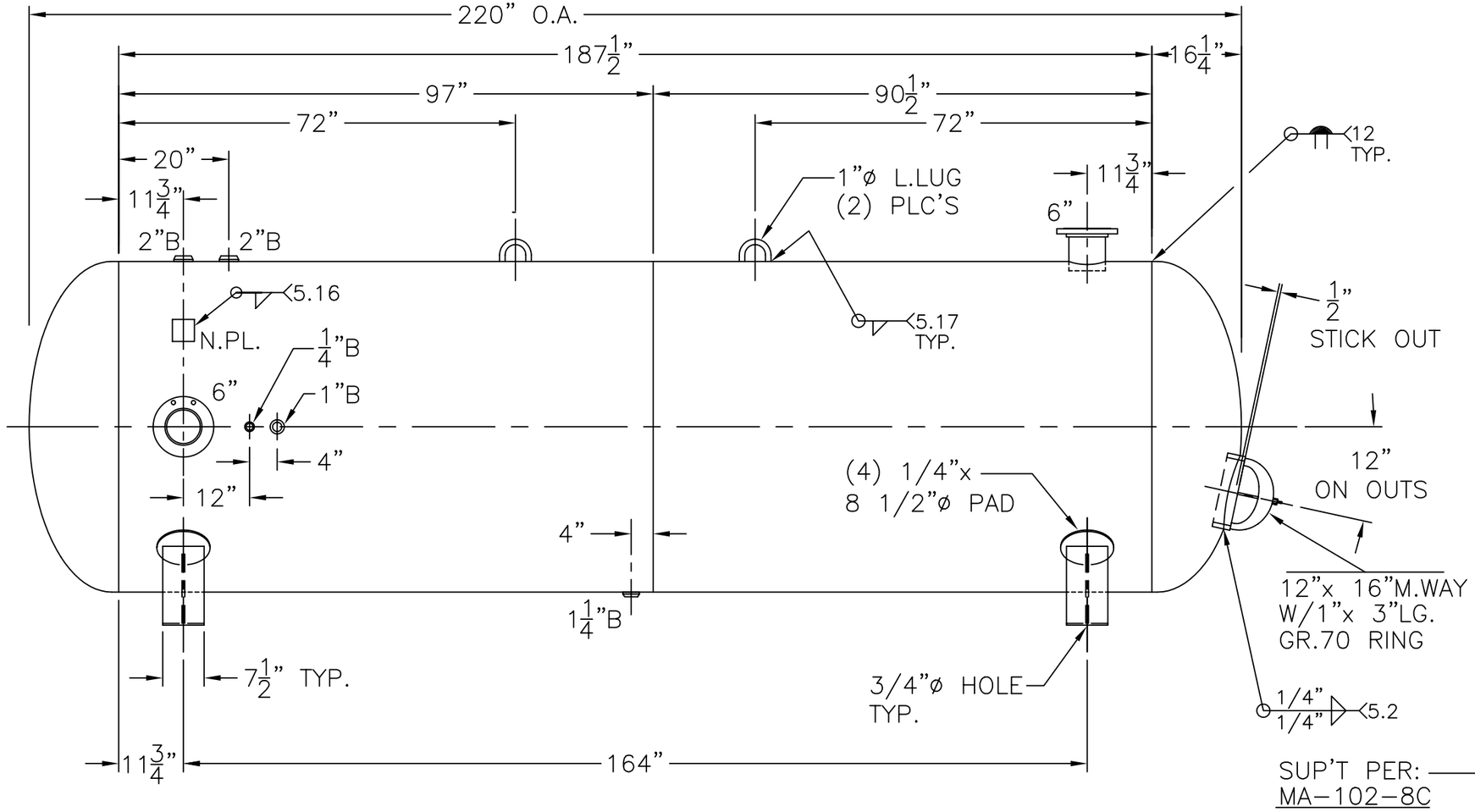

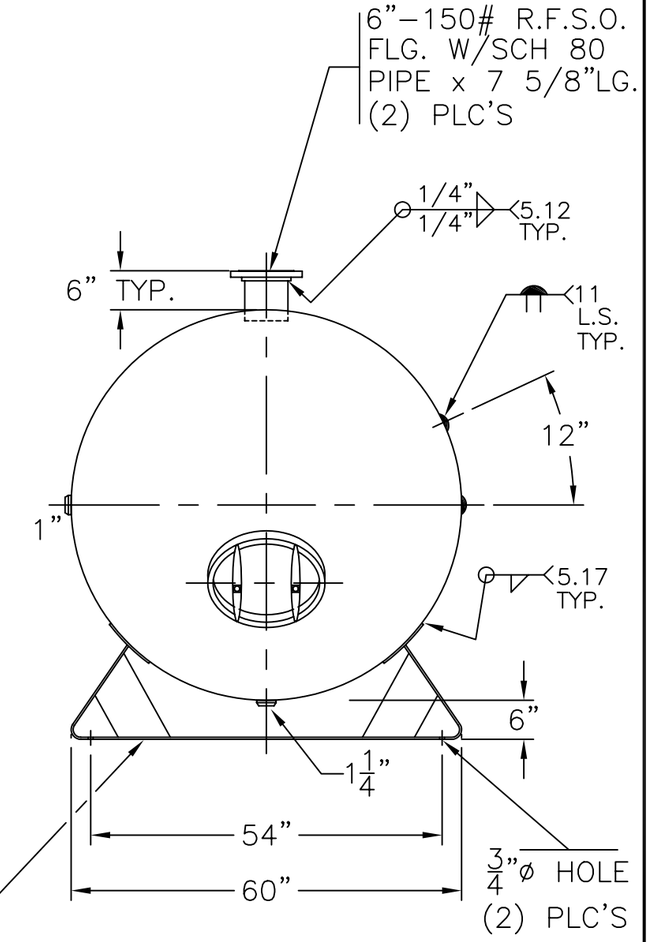

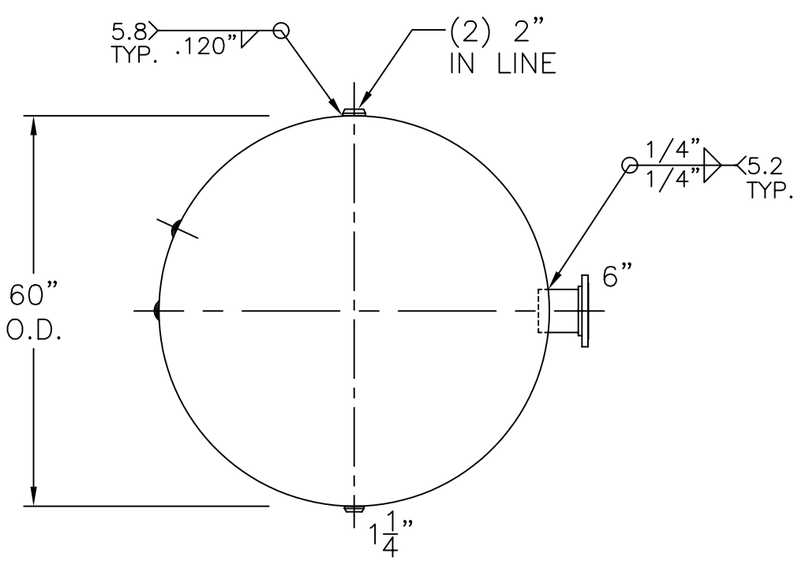

END VIEW W/OUT SUPT'S

NOTE: 1) HYDRO @ 181 PSIG. MIN.

SHELL / HEADS	LEFT – .248" SA-455 2:1 S.E.	60-HQ-2520-W	REV. 5-16-06
	(.194"MIN.)		DATE: 9-7-93
	RIGHT – .248" SA-455 2:1 S.E.	FOR: HANSON STANDARD	
	(.223"MIN.)	HORIZ. AIR TANK	
	.248" SA-455		
		INSIDE: UNPAINTED	
M.A.W.P. 137 PSIG. @ 400 °F			
M.D.M.T. -20 °F @ 137 PSIG.		OUTSIDE: PRIME	
ASME. SECTION VIII DIV. 1, 2004 ADD 2005		CAD-"B" SIZE UNDER "STD"-SERIES	
X-RAY: RT-4 SPOT L.S. & HDS. G.S.		BY: J.G.	SCALE: 1/2"=12"
GALLONS: 2520	WT. 3621 LBS.	ROY E. HANSON JR. MFG.	
SERIAL NO.		1600 E. WASHINGTON BLVD. LOS ANGELES, CA 90021	
N.B.			