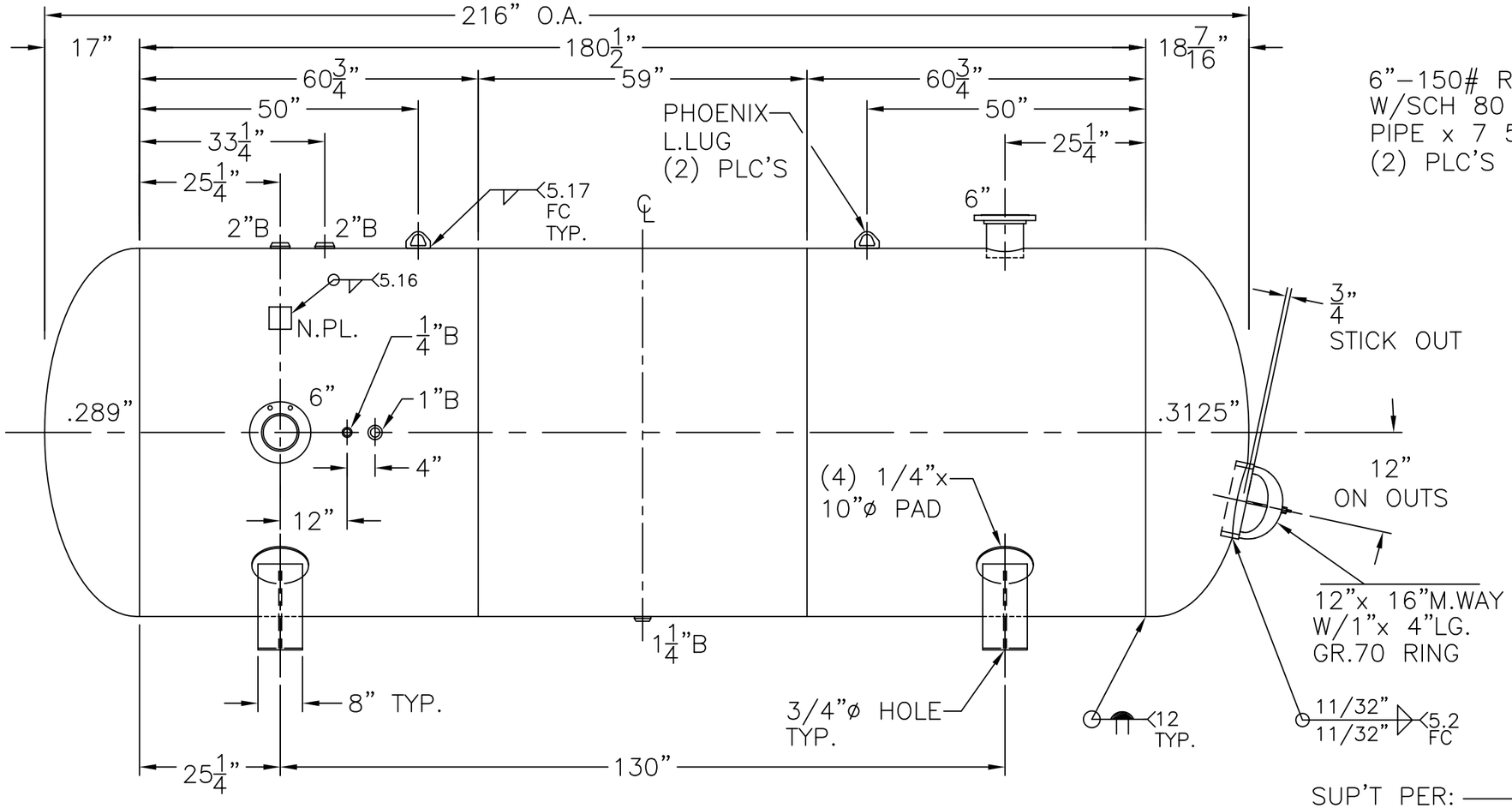

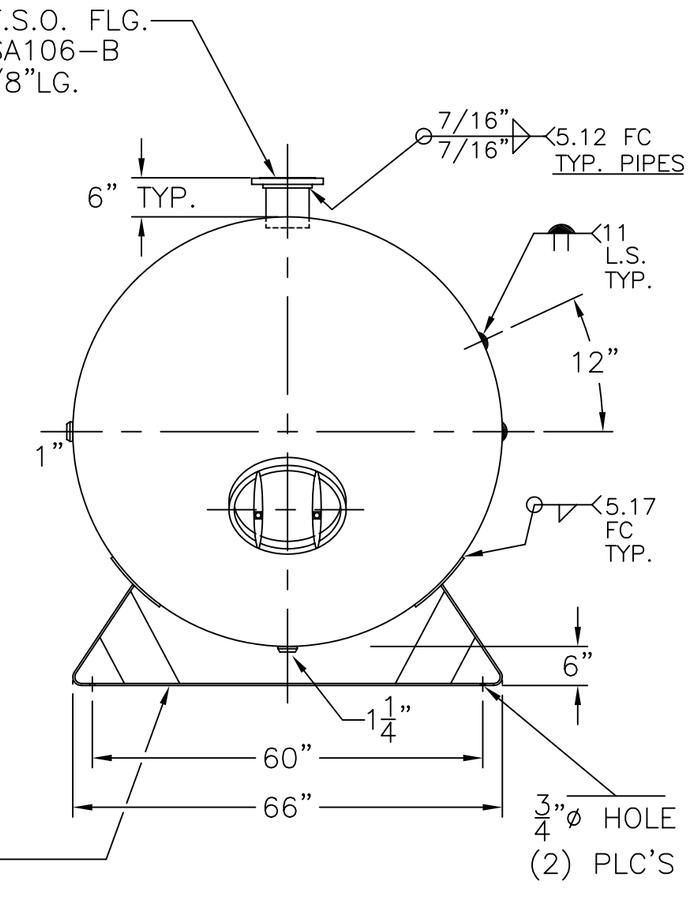

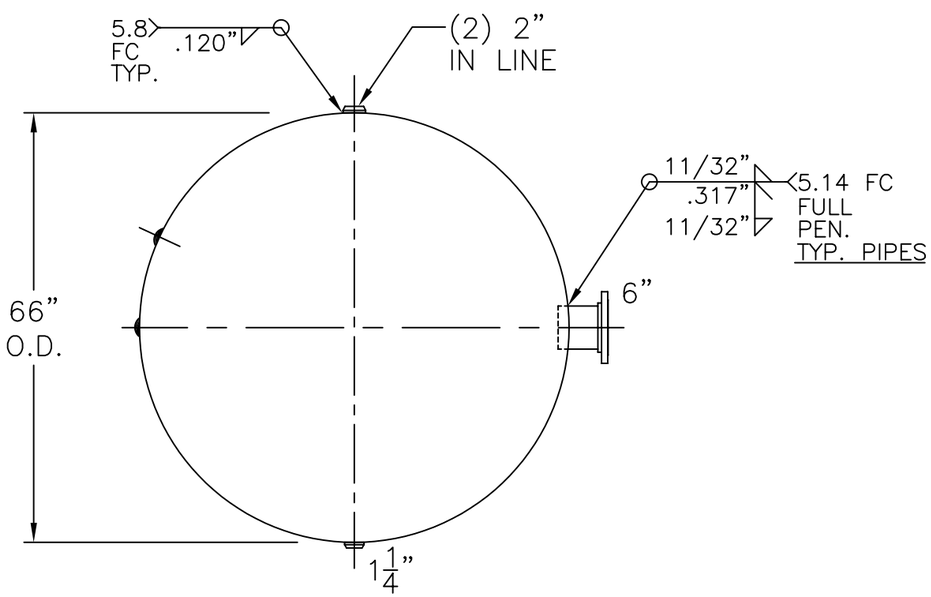

END VIEW W/OUT SUPT'S

NOTE: 1) HYDRO @ 218 PSIG. MIN.

SHELL / HEADS	RIGHT-.3125" SA-455 2:1 S.E.	66-HM-3000-W	REV. 10-16-08
	(.305" MIN.)		DATE: 1-4-81
	LEFT-.289" SA-455 2:1 S.E.	FOR: HANSON STANDARD	
	(.256" MIN.)	HORIZ. AIR TANK	
	.317" SA-455		
		UW-21 (b)	
		INSIDE: UNPAINTED	
M.A.W.P. 165 PSIG. @ 400 °F			
M.D.M.T. -20 °F @ 165 PSIG.		OUTSIDE: PRIME	
ASME. SECTION VIII DIV. 1, 2007 ADD 2007		CAD "B" SIZE UNDER "STD"-SERIES	
X-RAY: RT-4 SPOT L.S. & HDS. G.S.		BY: J.G.	SCALE:1/2"=12"
GALLONS: 3000	WT. 5007 LBS.	ROY E. HANSON JR. MFG.	
SERIAL NO.		1600 E. WASHINGTON BLVD. LOS ANGELES, CA 90021	
N.B.			