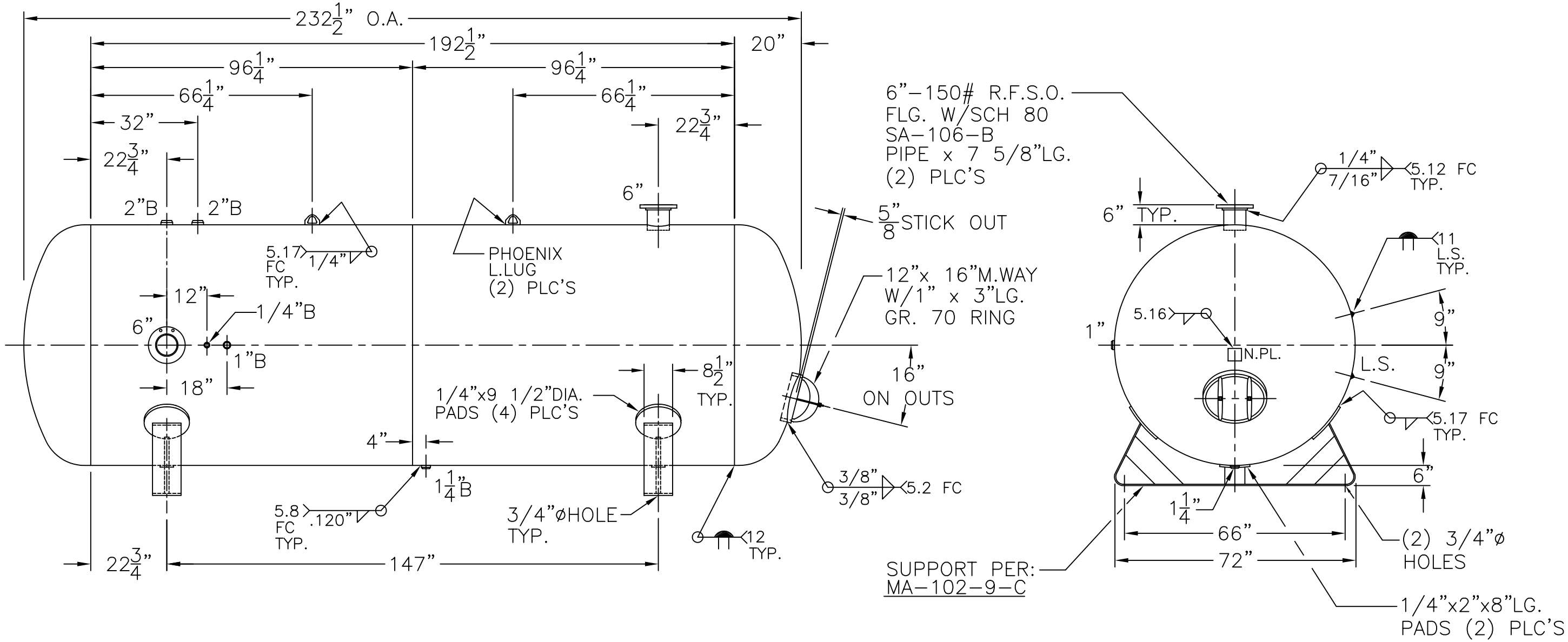


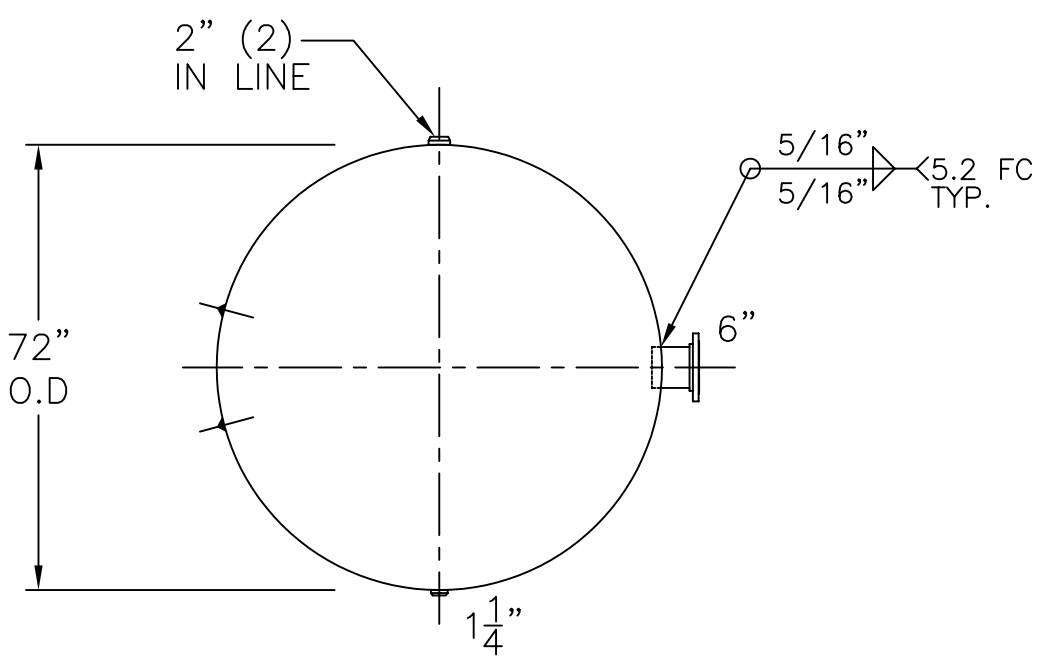


VIEW W/OUT SUPT'S

NOTE: 1) HYDRO @ 195 PSIG. MIN.

| | | | |
|---|---|---|---|
| SHELL / HEADS | RIGHT-.375" SA-455 2:1 S.E. | 72-HP-3800-W | REV. 8-24-11 |
| | (.308" MIN.) | | DATE: 11-2-02 |
| | LEFT -.375" SA-455 2:1 S.E. | FOR: HANSON STANDARD | |
| | (.295" MIN.) | HORIZ. AIR TANK. | |
| | .3125" SA-455 | UW-21(b) | |
| | | | |
| | | INSIDE: UNPAINTED | |
| M.A.W.P. 150 PSIG. @ 400 °F | | | |
| M.D.M.T. -20 °F 150 PSIG | | OUTSIDE: PRIME | |
| ASME. SECTION VIII DIV. 1, 2010 ADD 2010 | | CAD-"B" SIZE UNDER "STD"-SERIES | |
| X-RAY: RT-4 SPOT L.S. & NOT HDS. G.S. | | BY: J.G. | SCALE: 3/8"=12" |
| GALLONS: 3800 | WT. 5946 LBS. | ROY E. HANSON JR. MFG. | |
| SERIAL NO. | | 1600 E. WASHINGTON BLVD. LOS ANGELES, CA 90021 | |
| N.B. | | | |