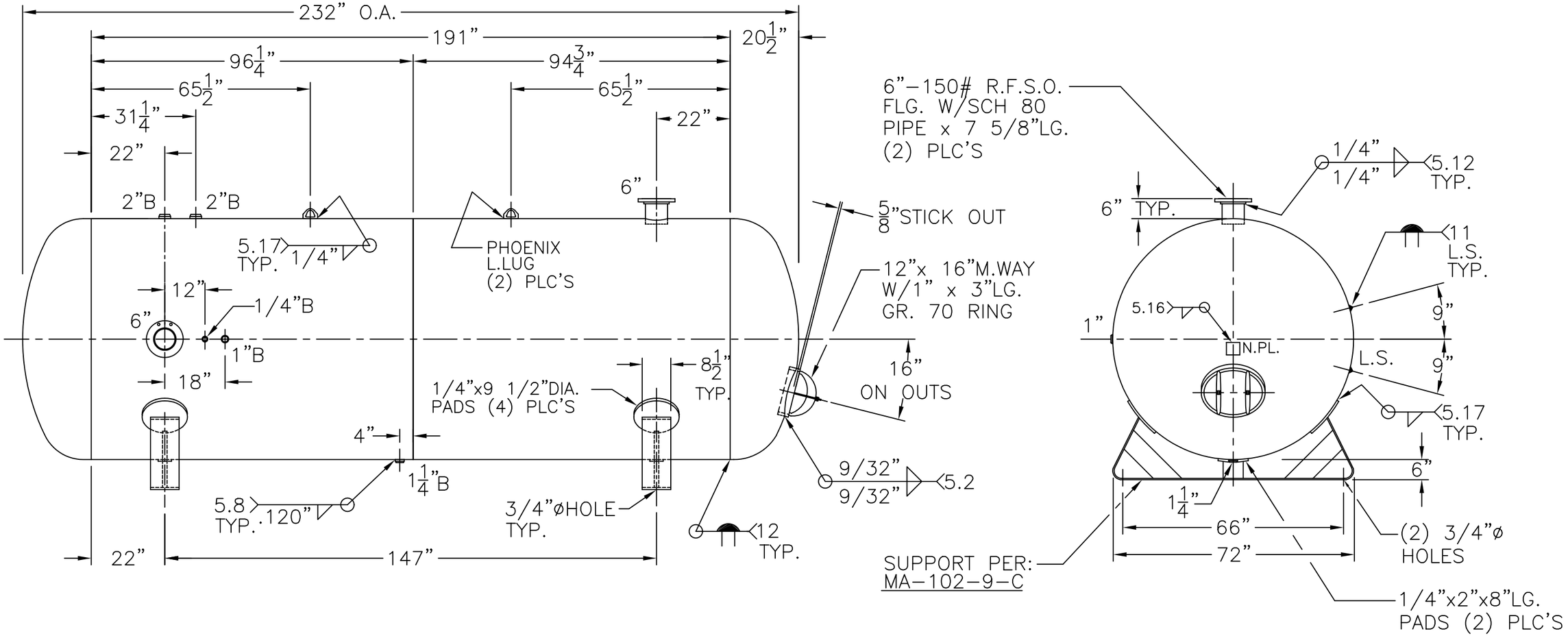

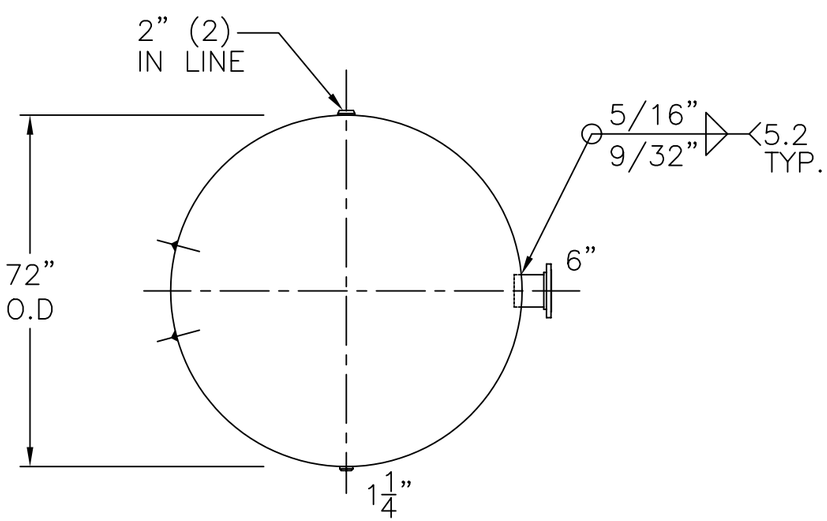

VIEW W/OUT SUPT'S

NOTE: 1) HYDRO @ 182 PSIG. MIN.
2) WELD TO, OR JOINING SA-612 HAVE W.P.S. W/SUFFIX "B".

SHELL / HEADS	.260" SA-612 2:1 S.E.	72-HQ-3800-W	REV. 11/27/02
	(.249" MIN.)		DATE: 1/4/02
		FOR: HANSON STANDARD	
		HORIZ. AIR TANK.	
	.281" SA-455		
		INSIDE: UNPAINTED	
M.A.W.P. 137 PSIG. @ 400 °F			
M.D.M.T. -20 °F 137 PSIG		OUTSIDE: PRIME	
ASME. SECTION VIII DIV. 1, 2001 ADD 2002		CAD "B" SIZE UNDER "STD"-SERIES	
X-RAY: RT-4 SPOT L.S. ONLY		BY: J.G.	SCALE: 3/8"=12"
GALLONS: 3800	WT. 5134 LBS.	ROY E. HANSON JR. MFG.	
SERIAL NO.		1924 COMPTON AVE. LOS ANGELES, CA 90011	
N.B.			