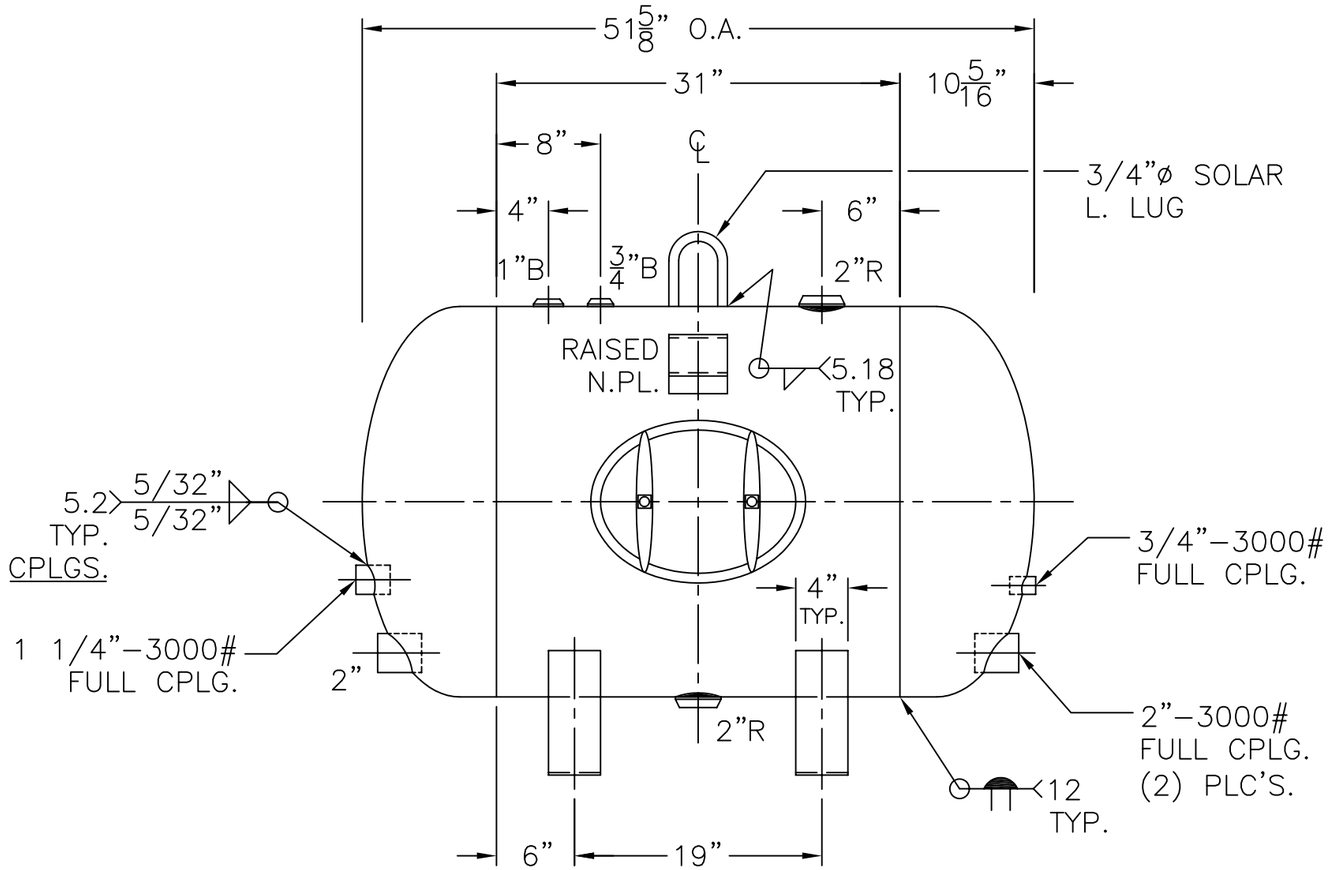

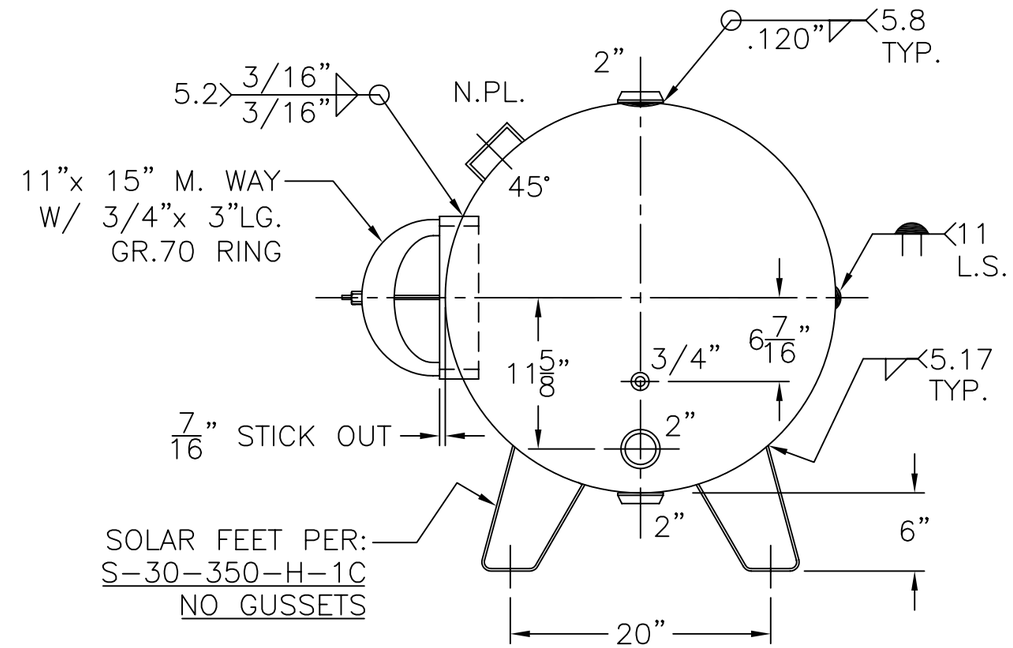

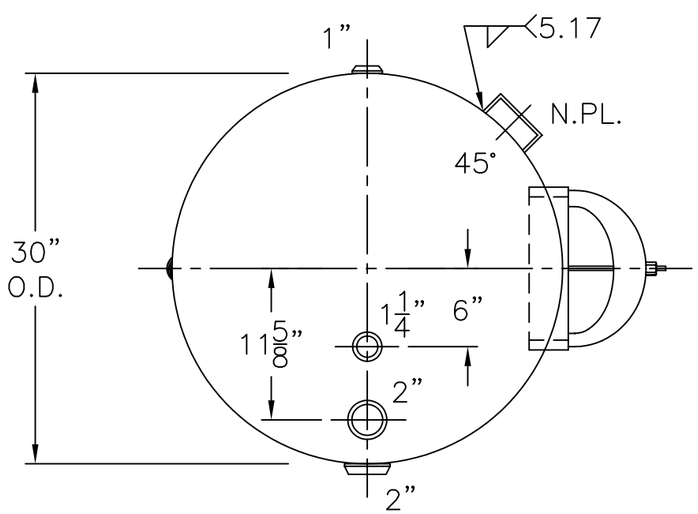

VIEW W/OUT SUPPORTS

NOTE: 1) HYDRO @ 240 PSIG. MIN.
2) 4-1-04 PROOF TEST.

SHELL / HEADS	.166" SA-414-G 2:1 S.E.	ES-30-140-H	REV. 9-14-04
	JOGGLE		DATE: 3-2-90
		FOR: HANSON STANDARD	
		HORIZ. HOT WATER TANK	
	.165" SA-414-G	SURFACE AREA = 37.1 SQ. FT.	
		INSIDE: EPOXY LINED	
M.A.W.P. 160 PSIG. @ 180 °F			
		OUTSIDE: PRIME	
ASME. SECTION IV 2001 ADD 2003		CAD-"B" UNDER "STD"-SERIES	
X-RAY: RT-NO / H.L.W.		BY: E.S.	SCALE: 1"=12"
GALLONS: 140	WT. 334 LBS.	ROY E. HANSON JR. MFG.	
SERIAL NO.		1924 COMPTON AVE.	
N.B.		LOS ANGELES, CA 90011	