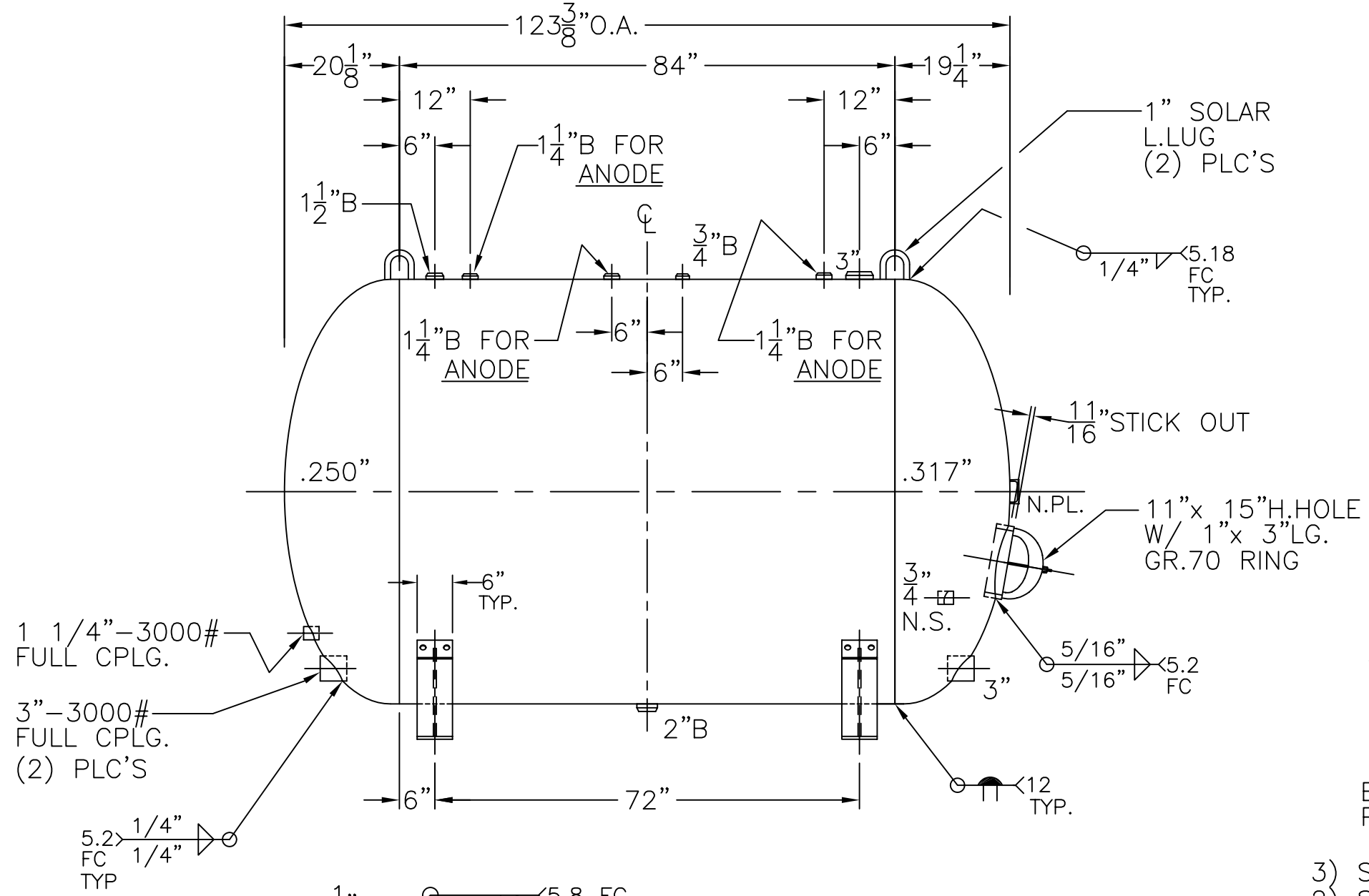

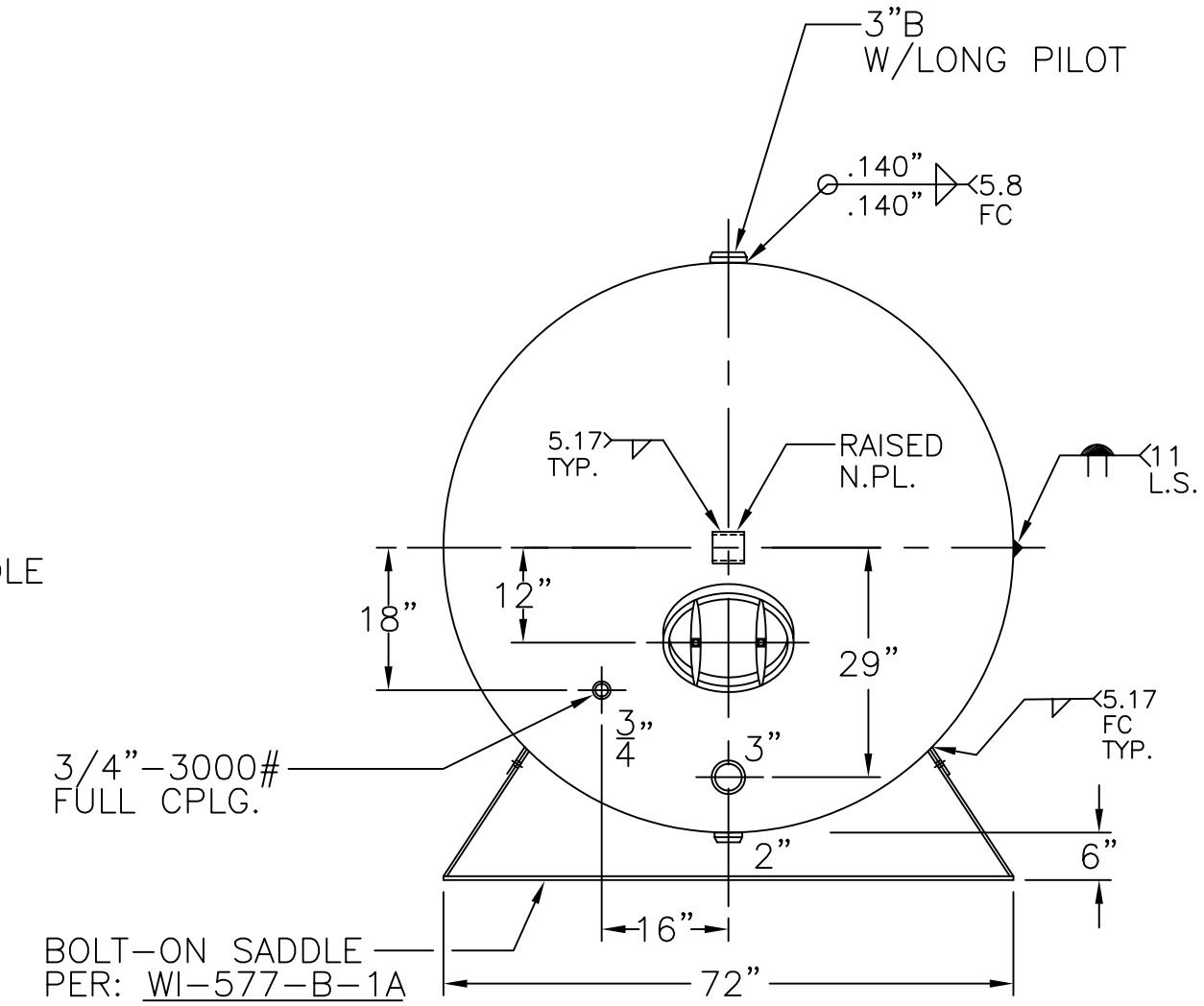

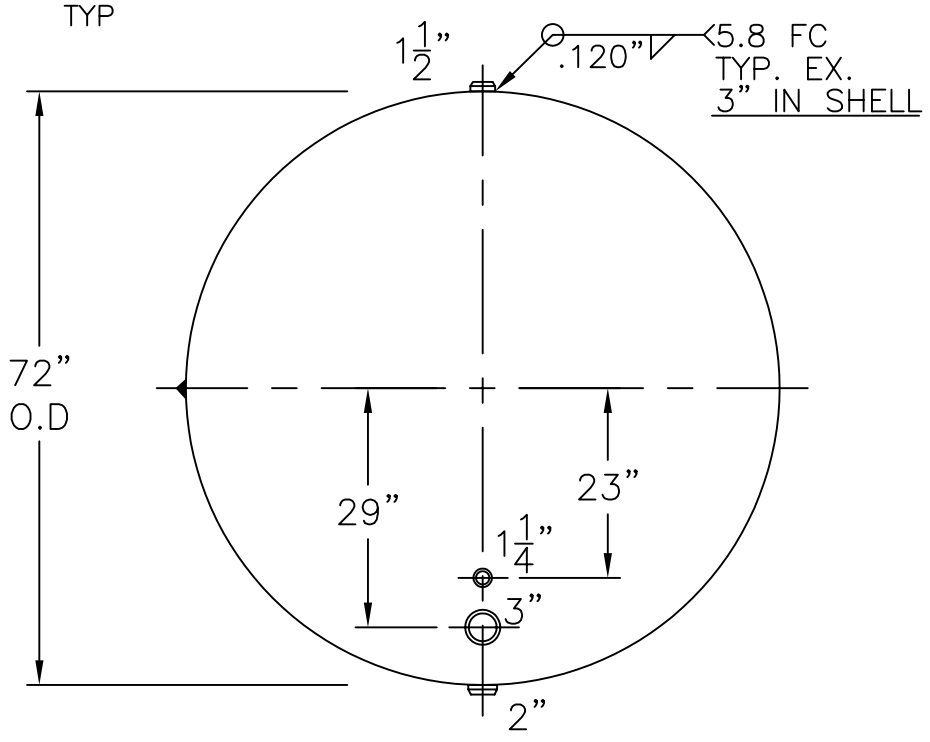

VIEW W/OUT SUPT'S

3) SHELL & LEFT HEAD – 8/26/04 PROOF TEST.
2) SHIP LOOSE W/(3) 1 5/16" x 60"LG. FLEX. MAG. ANODES.
NOTE. 1) HYDRO @ 188 PSIG. MIN. TO 197 PSIG. MAX.

SHELL / HEADS	LEFT – .250" SA-455 2:1 S.E. (.210" MIN.)	GS-72-1950-H	REV. 8-26-11 DATE: 5-21-90
	RIGHT – .317" SA-455 2:1 S.E. (.265" MIN.)	FOR: HANSON TANK	
	.250" SA-455	HORIZ. HOT WATER TANK.	
		SURFACE AREA = 215.0 SQ.FT.	
		INSIDE: GLASS LINED	
M.A.W.P.	125 PSIG. @ 210 °F		
		OUTSIDE: PRIME	
ASME. SECTION IV	2010 ADD 2010	CAD "B" SIZE UNDER "STD"-SERIES	
X-RAY:	RT-NO/H.L.W.	BY: J.G.	SCALE: 1/2"=12"
GALLONS: 1950	WT. 3138 LBS.	ROY E. HANSON JR. MFG.	
SERIAL NO.		1600 E. WASHINGTON BLVD. LOS ANGELES, CA 90021	
N.B.			