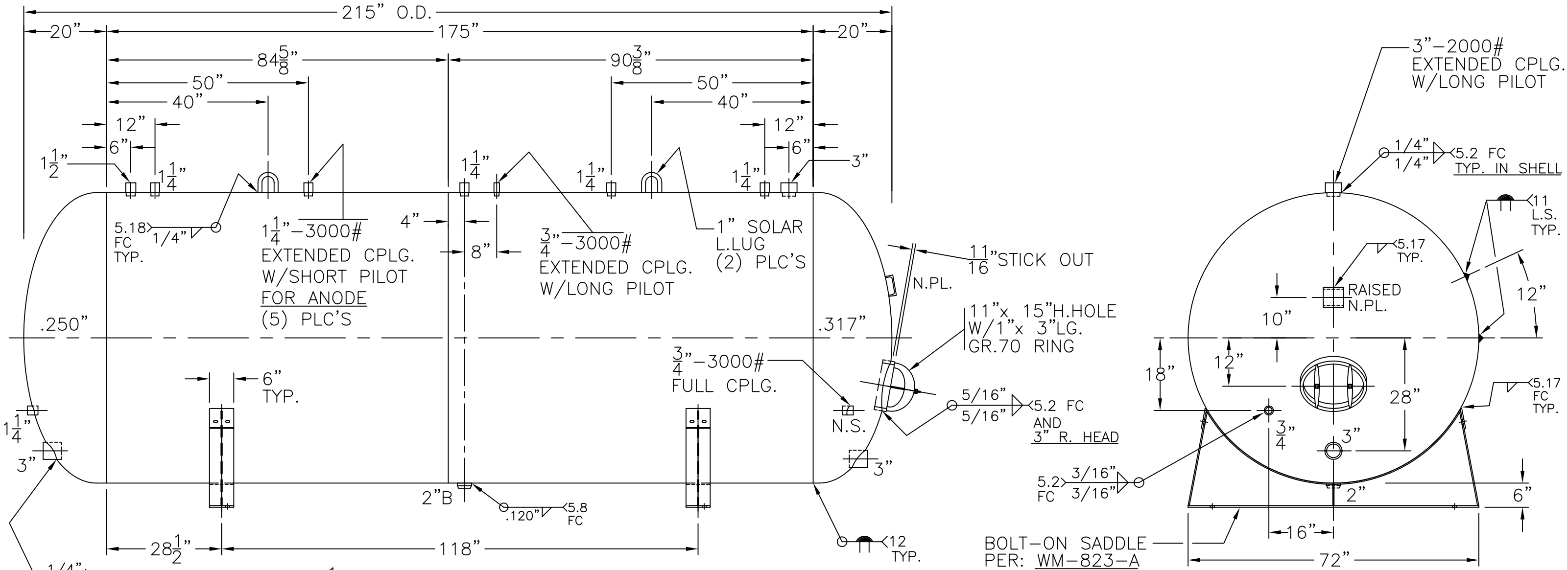

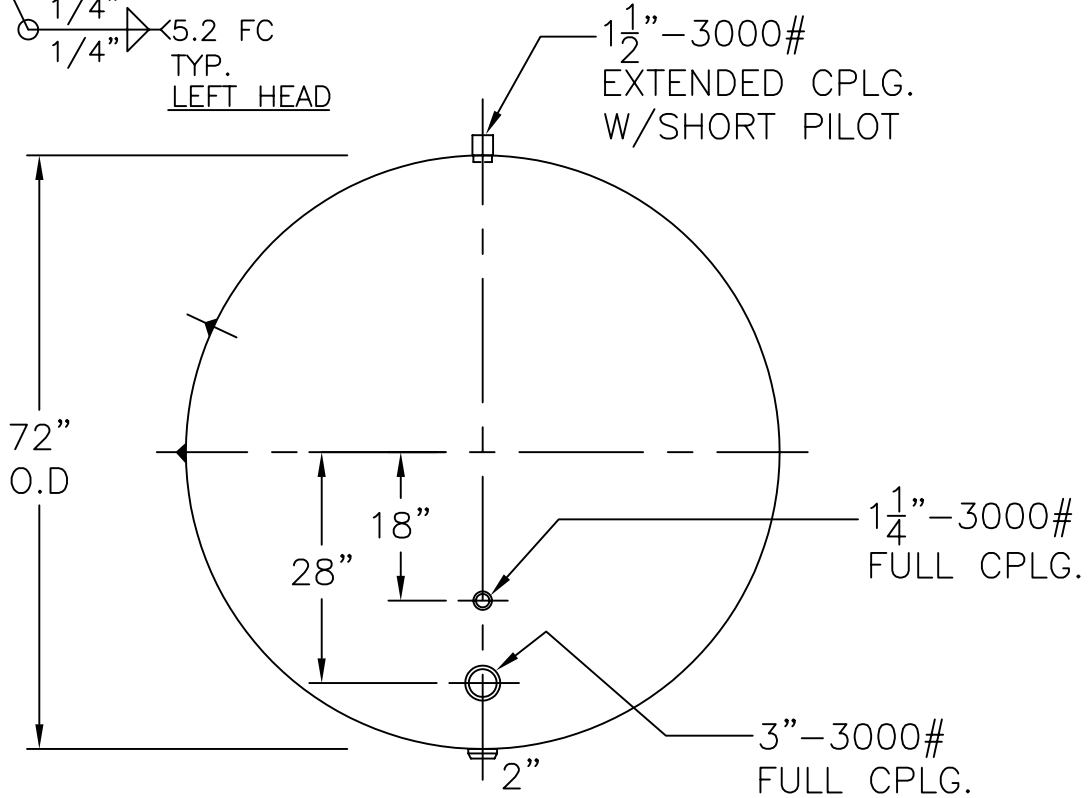

VIEW W/OUT SUPT'S

3) SHELL & LEFT HEAD – 8/26/04 PROOF TEST.
2) SHIP LOOSE W/(5) 1 5/16" x 72"LG. FLEX. MAG. ANODES.
NOTE. 1) HYDRO @ 188 PSIG. MIN. TO 197 PSIG. MAX.

SHELL / HEADS	LEFT – .250" SA-455 2:1 S.E.	GS-72-3500-H	REV. 10-12-09
	(.210" MIN.)		DATE: 10-8-09
	RIGHT – .317" SA-455 2:1 S.E.	FOR: HANSON TANK	
	(.263" MIN.)	HORIZ. HOT WATER TANK.	
	.252" SA-455	SURFACE AREA = 360.0 SQ. FT.	
		INSIDE: GLASS LINED	
M.A.W.P. 125 PSIG. @ 210 °F		OUTSIDE: S. BLAST, INORGANIC	
		ZINC PRIME & R-16	
ASME. SECTION IV 2007 ADD 2008		CAD "B" SIZE UNDER "STD"-SERIES	
X-RAY: RT-NO/H.L.W.		BY: J.G.	SCALE: 1/2"=12"
GALLONS: 3500	WT. 4938 LBS.	ROY E. HANSON JR. MFG.	
SERIAL NO.		1600 E. WASHINGTON BLVD. LOS ANGELES, CA 90021	
N.B.			