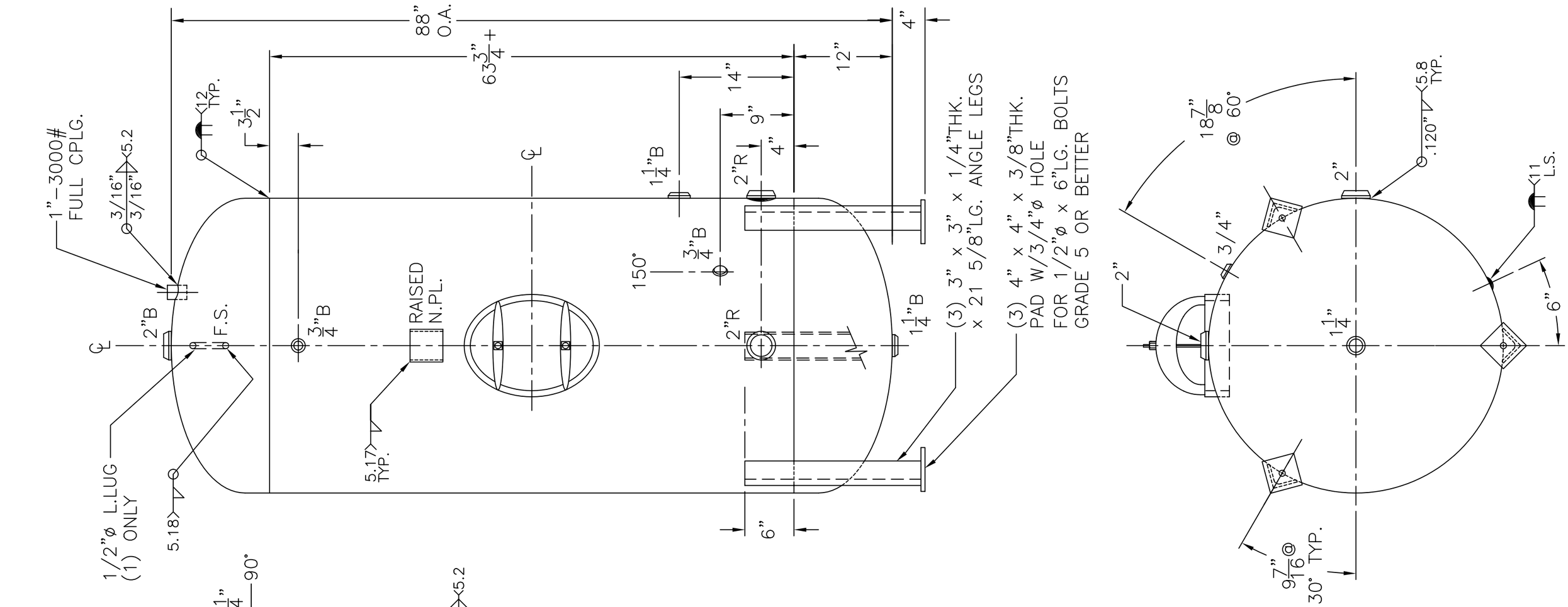


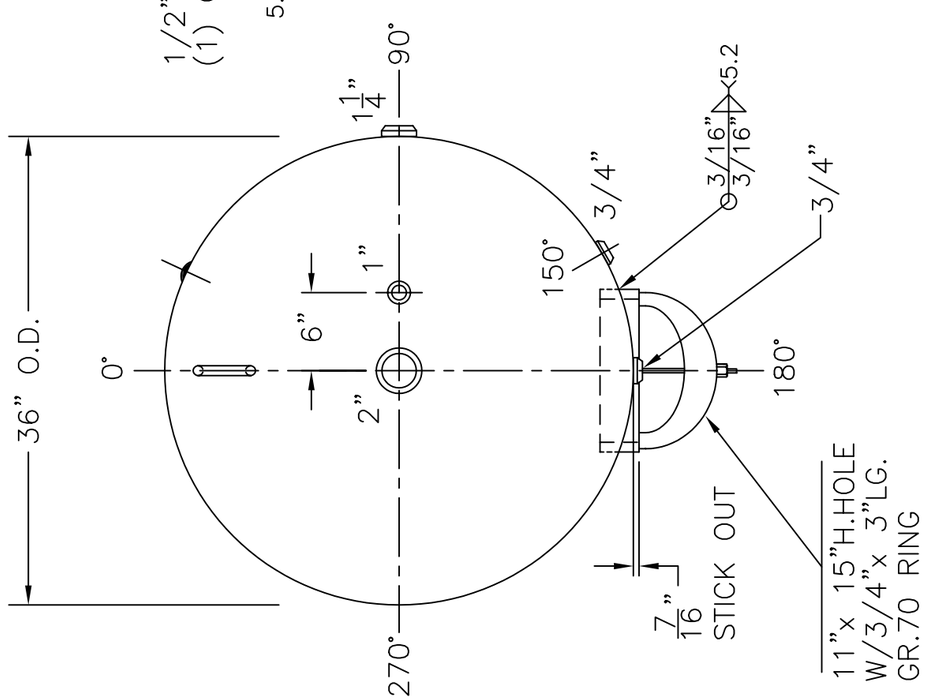


NOTE: 1) HYDRO @ 240 PSIG.
2) 4–1–04 PROOF TEST.

| | | |
|---|---|---|
| SHELL / HEADS | .182" SA–455 2:1 S.E. | ES–36–360–V |
| | JOGGLE – .149 OFFSET | REV: 1–17–07 |
| | | DATE: 8–31–89 |
| | | FOR: HANSON STANDARD |
| | | VERT. HOT WATER TANK |
| | .164" SA–414–G | SURFACE AREA = 73.8 SQ. FT. |
| | | |
| | | INSIDE: EPOXY LINED |
| M.A.W.P. 160 PSIG. @ 180 °F | | OUTSIDE: PRIME |
| | | CAD "B" SIZE UNDER "STD"–SERIES |
| ASME. SECTION IV 2004 ADD 2006 | | LEG ZONE: 4–15 KM. DATE: 1–10–03 |
| X–RAY: RT–NO / H.L.W. | | BY: J.G. SCALE: 1" = 12" |
| GALLONS: 360 | WT. 603 LBS. | ROY E. HANSON JR. MFG. |
| SERIAL NO. | | 1600 E. WASHINGTON BLVD. LOS ANGELES, CA 90021 |
| N.B. | | |